BRAKE DISC
09.5509.14

The 09.5509.14 brake disc is synonymous with reliability

The Brembo brake disc is fully interchangeable with an Original Equipment brake disc. The control of the entire production cycle allows Brembo to offer brake discs with outstanding performance levels, reliability, durability and comfort in all conditions of use. All Brembo brake discs are accompanied by the ECE-R90 homologation.

- OE-equivalent
- Brembo quality
- ECE-R90 certificate
- Safety
- Fastening screws

Technical specifications

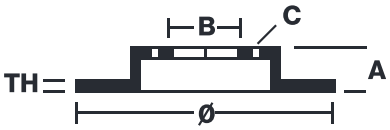

EAN code	8020584012871
Diameter Ø	262 mm
Thickness (TH)	21 mm
Height (A)	45 mm
Number of holes (C)	4
Brake disc type	Ventilated
Centering (B)	64 mm
Min. thickness	19 mm
Tightening torque	108 Nm

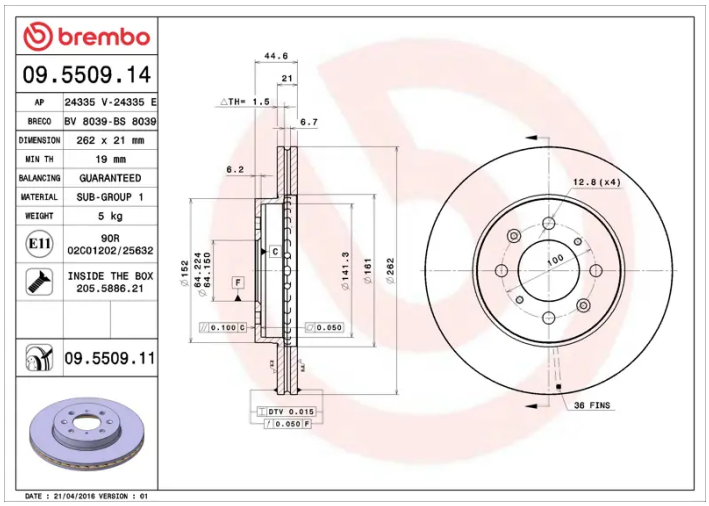

COMPATIBLE VEHICLES

COMPATIBLE OE PART NUMBERS

45251SK7000	ACURA
45251SK7A00	ACURA
45251SR0A00	ACURA
45251SR0A10	ACURA
45251SK7000	HONDA
45251SK7A00	HONDA
45251SK7A10	HONDA
45251SK7J00	HONDA
45251SR0A00	HONDA
45251SR0A10	HONDA
45251ST3E10	HONDA
45251SZY000	HONDA
45251T9AT00	HONDA
45251T9PJ00	HONDA
45251T6PH00	HONDA (GAC)
GBD90840	LOTUS
SDB000990	MG
SDB000991	MG
SDB100600	MG
GBD90840	ROVER
SDB000990	ROVER
SDB000991	ROVER
SDB100600	ROVER