BRAKE DISC PAINTED
09.C424.11

The 09.C424.11 painted brake disc is synonymous with reliability

The Brembo brake disc with special UV paint treatment guarantees superior corrosion resistance for the product, thanks to the protective coating on the outer edges and on the disc hub. The UV paint not only gives the disc a clean, shiny appearance but is also beneficial for the environment as the water-based UV paint treatment does not require the use of chemical solvents and is a low energy consumption process.

- OE-equivalent
- Brembo quality
- ECE-R90 certificate
- Safety
- High carbon
- Anti-corrosion

Technical specifications

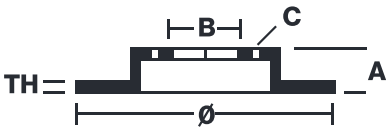

EAN code 8020584222539	Axle Front	Diameter Ø 302 mm
Thickness (TH) 32 mm	Height (A) 61 mm	Number of holes (C) 6
Brake disc type Ventilated	Centering (B) 98 mm	Min. thickness 30 mm

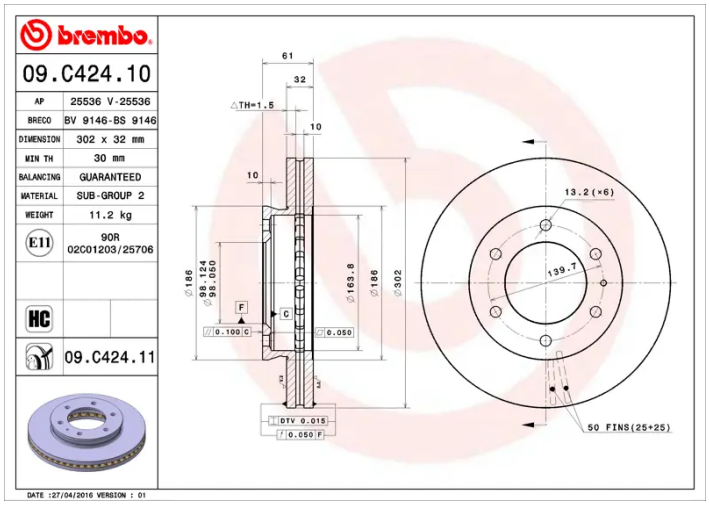

COMPATIBLE VEHICLES

COMPATIBLE OE PART NUMBERS

1742318	FORD
1763037	FORD
AB311125AA	FORD
AB311125AB	FORD
AB311125AC	FORD
UC2B33251B	FORD
AB311125AC	FORD ASIA & OCEANIA
1727183	FORD USA
1742318	FORD USA
1763037	FORD USA
AB311125AA	FORD USA
AB311125AB	FORD USA
AB311125AC	FORD USA
UC2B33251A	MAZDA
UC2B33251B	MAZDA