# GREENANCE BRAKE PAD P 24 187G

## The brake pad P 24 187G to be combined with the Greenance brake disc

The Beyond Greenance brake pad in combination with the Greenance brake disc will reduce PM10 and PM2.5 fine particulate emissions, limiting the environmental footprint of your driving. This brake pad is part of the Beyond Greenance Kit, to guarantee superior resistance to wear and therefore longer durability of components.

- Brembo quality
- ECE-R90 certificate
- Comfort
- Dust reduction
- Green packaging

## Technical specifications

| | | |
|---|---|---|
| EAN code<br>8020584125090 | Axle<br>Rear | Thickness<br>17 mm |
| Width<br>137 mm | Height<br>59 mm | Braking system<br>TRW |
| Wear indicator<br>Electric | WVA number<br>25603,25604 | Accessories<br>With accessories<br>With anti-squeal shim<br>With brake caliper bolts |

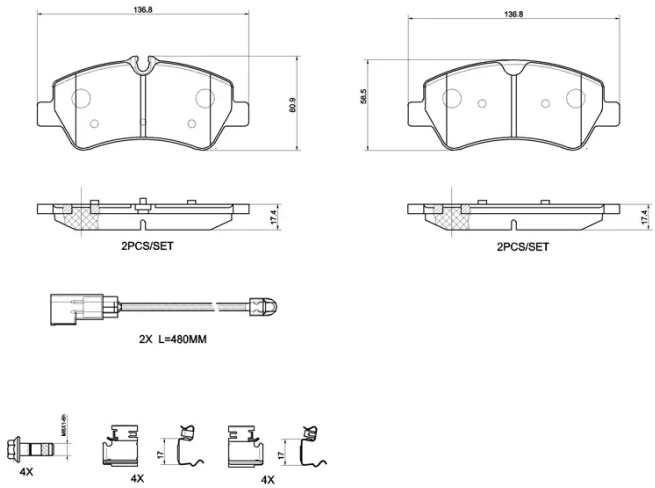


COMPATIBLE VEHICLES

## COMPATIBLE OE PART NUMBERS

| | |
|---|---|
| 1916327 | FORD |
| 2006029 | FORD |
| 2325325 | FORD |
| 2480690 | FORD |
| KTMK312K021AA | FORD |
| KTNK312M008AA | FORD |
| MEBK2J2M008AA | FORD |
| MEBK3J2M008AA | FORD |