X-STYLE BRAKE CALIPER KIT
F AA 032

Brembo F AA 032 aluminium brake caliper kit

Brembo aluminium brake caliper kits are dedicated to car owners who are passionate and care deeply about the aesthetics of their vehicle. Check compatibility with your car and choose your favourite colour

- OE-equivalent
- Brembo quality
- Safety
- Performance
- Sporty look
- With accessories
- Kit

Technical specifications

EAN code	Axle	Diameter
8020584553732	Front	42 mm
Number of pistons	**Braking system**	**Position**
4	BREMBO	Left, Right

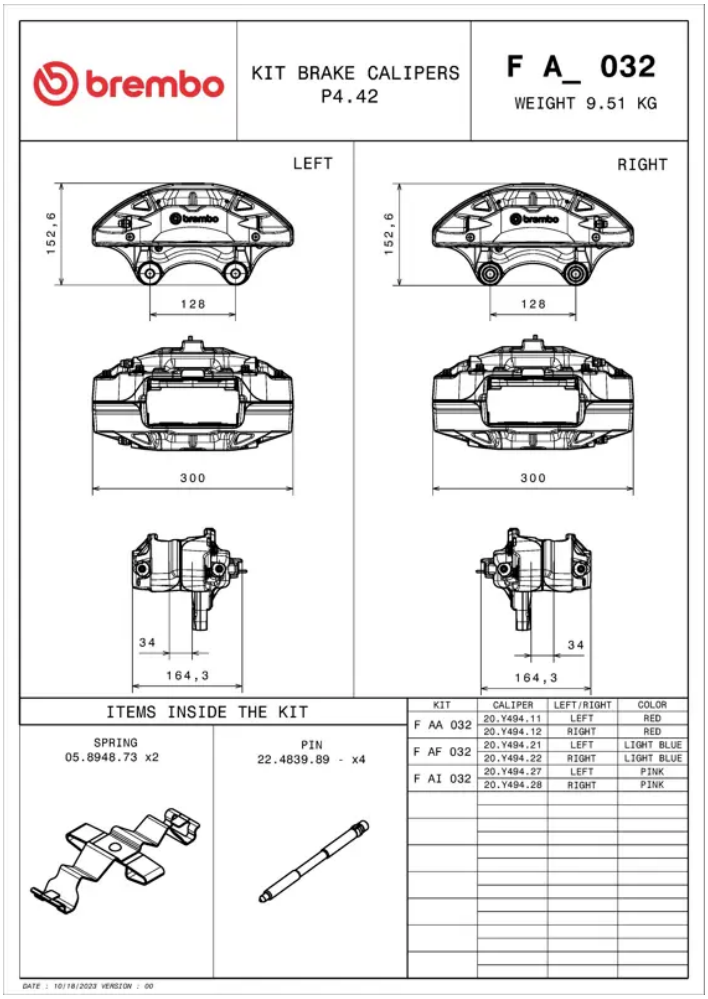

COMPATIBLE VEHICLES

COMPATIBLE OE PART NUMBERS

3510110ED10003	XPENG
3510111ED10002	XPENG
3510210ED10003	XPENG
3510211ED10002	XPENG