BRAKE DISC
09.A864.14

The 09.A864.14 brake disc is synonymous with reliability

The Brembo brake disc is fully interchangeable with an Original Equipment brake disc. The control of the entire production cycle allows Brembo to offer brake discs with outstanding performance levels, reliability, durability and comfort in all conditions of use. All Brembo brake discs are accompanied by the ECE-R90 homologation.

- OE-equivalent
- Brembo quality
- ECE-R90 certificate
- Safety

Technical specifications

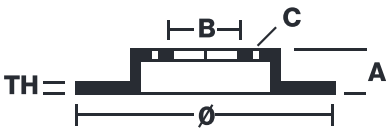

EAN code 8020584023259	Axle Front	Diameter Ø 275 mm
Thickness (TH) 22 mm	Height (A) 46 mm	Number of holes (C) 5
Brake disc type Ventilated	Centering (B) 62 mm	Min. thickness 19 mm
Tightening torque 103 Nm		

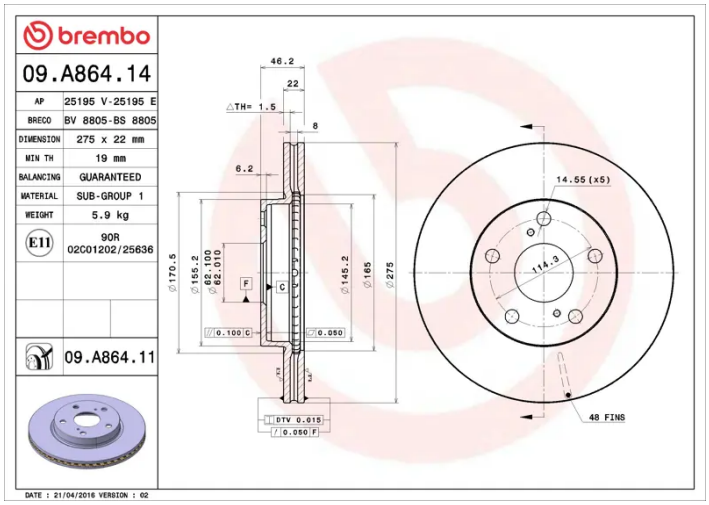

COMPATIBLE OE PART NUMBERS

4351212670	TOYOTA
4351202220	TOYOTA (FAW)
4351202360	TOYOTA (GAC)