# BRAKE PAD
# P 23 152

## The P 23 152 brake pad is synonymous with reliability

The Brembo brake pad guarantees ultimate safety when braking thanks to the use of more than 100 different compounds, designed according to the type of vehicle and use. Stopping distances reduced to a minimum, maximum driving comfort and silent operation are the most important features of Brembo materials. Brembo brake pads are supplied together with an extensive range of accessories and assembly kits for professional-standard installation.

- OE-equivalent
- Brembo quality
- ECE-R90 certificate
- Safety
- Performance
- Comfort
- With accessories

## Technical specifications

| | | |
|---|---|---|
| EAN code<br>8020584109908 | Axle<br>Rear | Thickness<br>18 mm |
| Width<br>117 mm | Height<br>50 mm | Braking system<br>Lucas |
| Wear indicator<br>Electric | WVA number<br>23811,24788 | Accessories<br>With accessories<br>With anti-squeal shim<br>With brake caliper bolts |

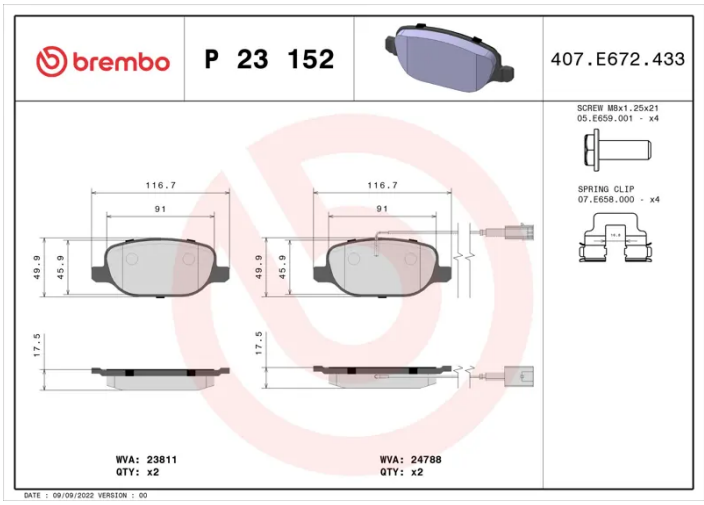


COMPATIBLE VEHICLES

# COMPATIBLE OE PART NUMBERS

| | |
|---|---|
| 71770096 | ALFA ROMEO |
| 77365542 | ALFA ROMEO |