BRAKE DISC PAINTED
08.7106.11

The 08.7106.11 painted brake disc is synonymous with reliability

The Brembo brake disc with special UV paint treatment guarantees superior corrosion resistance for the product, thanks to the protective coating on the outer edges and on the disc hub. The UV paint not only gives the disc a clean, shiny appearance but is also beneficial for the environment as the water-based UV paint treatment does not require the use of chemical solvents and is a low energy consumption process.

- OE-equivalent
- Brembo quality
- ECE-R90 certificate
- Safety
- Anti-corrosion

Technical specifications

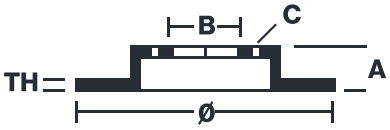

EAN code 8020584032664	Diameter Ø 315 mm	
Thickness (TH) 18 mm	Height (A) 84 mm	Number of holes (C) 6
Brake disc type Solid	Centering (B) 108 mm	Min. thickness 16,4 mm
Tightening torque 100 Nm		

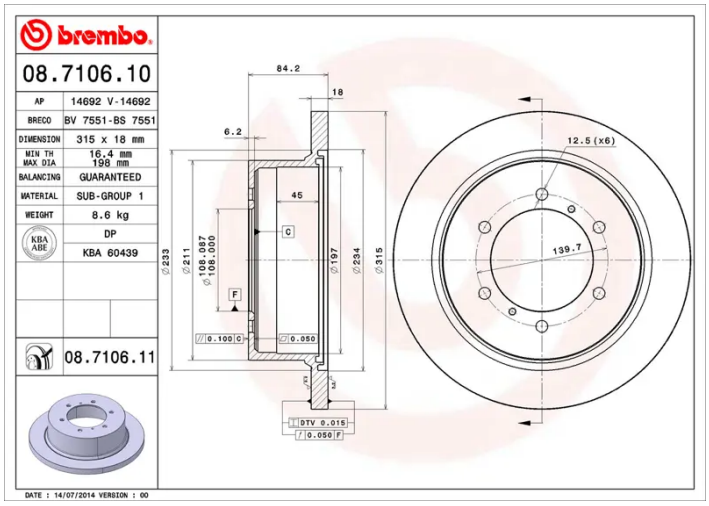

COMPATIBLE VEHICLES

COMPATIBLE OE PART NUMBERS

MB618719	MITSUBISHI
MB618797	MITSUBISHI