BRAKE PAD
P 18 045

The P 18 045 brake pad is synonymous with reliability

The Brembo brake pad guarantees ultimate safety when braking thanks to the use of more than 100 different compounds, designed according to the type of vehicle and use. Stopping distances reduced to a minimum, maximum driving comfort and silent operation are the most important features of Brembo materials. Brembo brake pads are supplied together with an extensive range of accessories and assembly kits for professional-standard installation.

- OE-equivalent
- Brembo quality
- ECE-R90 certificate
- Safety
- Performance
- Comfort
- With accessories

Technical specifications

EAN code 8020584123669	Axle Rear	Thickness 10 mm
Width 88 mm	Height 55 mm	
Wear indicator Without	Accessories With accessories With anti-squeal shim With brake caliper bolts	

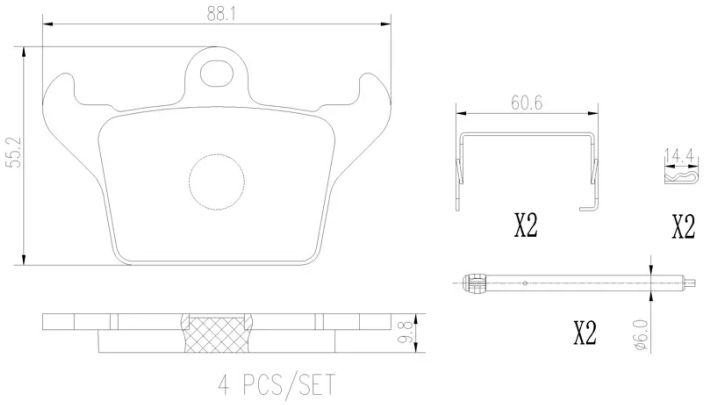

COMPATIBLE VEHICLES

COMPATIBLE OE PART NUMBERS

5093307AA	CHRYSLER