BRAKE PAD
P 85 092

The P 85 092 brake pad is synonymous with reliability

The Brembo brake pad guarantees ultimate safety when braking thanks to the use of more than 100 different compounds, designed according to the type of vehicle and use. Stopping distances reduced to a minimum, maximum driving comfort and silent operation are the most important features of Brembo materials. Brembo brake pads are supplied together with an extensive range of accessories and assembly kits for professional-standard installation.

- OE-equivalent
- Brembo quality
- ECE-R90 certificate
- Safety
- Performance
- Comfort
- With accessories

Technical specifications

EAN code 8020584062418	Axle Front	Thickness 20 mm
Width 119 mm	Height 70 mm	Braking system Lucas
Wear indicator Without	WVA number 20669	Accessories With accessories With anti-squeal shim With brake caliper bolts

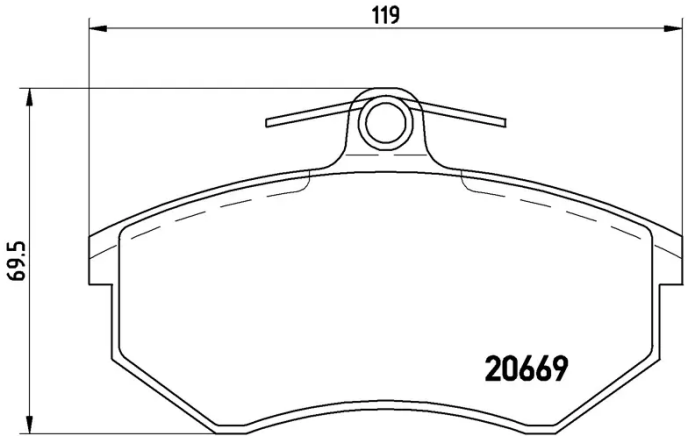

COMPATIBLE VEHICLES

COMPATIBLE OE PART NUMBERS

357698151	AUDI
431698151D	AUDI
431698151F	AUDI
431698151G	AUDI
440615116A	AUDI
440698151A	AUDI
443698151	AUDI
443698151A	AUDI
443698151J	AUDI
443698151K	AUDI
8A0615115D	AUDI
8A0698151A	AUDI
8D0698151E	AUDI
8D0698151L	AUDI
357698151	SEAT
431698151D	SEAT
431698151F	SEAT
431698151G	SEAT
440615116A	SEAT
440698151A	SEAT
443698151	SEAT
443698151A	SEAT
443698151J	SEAT
443698151K	SEAT
8A0615115D	SEAT
8A0698151A	SEAT
8D0698151L	SEAT
357698151	SKODA
431698151D	SKODA
431698151F	SKODA
431698151G	SKODA
440615116A	SKODA
440698151A	SKODA
443698151	SKODA
443698151A	SKODA
443698151J	SKODA
443698151K	SKODA
8A0615115D	SKODA
8A0698151A	SKODA
8D0698151L	SKODA
357698151	VW
431698151D	VW
431698151F	VW
431698151G	VW
440615116A	VW

440698151A	VW
443698151	VW
443698151A	VW
443698151J	VW
443698151K	VW
8A0615115D	VW
8A0698151A	VW
8D0698151L	VW