BRAKE PAD PRIME CERAMIC P06113N

The P06113N NAO brake pad is synonymous with reliability

Brembo NAO brake pads stand out for their ultimate braking comfort, reduced friction wear and low dust mission, which makes for cleaner rims and reduced maintenance requirements. The advanced friction material in keeping with the strictest environmental standards is the main distinguishing feature of NAO compounds.

- OE-equivalent
- Brembo quality
- Safety
- Comfort
- Durability
- Dust reduction
- With accessories

Technical specifications

EAN code 8020584118900	Axle Rear	Thickness 17 mm
Width 99 mm	Height 44 mm	Braking system TRW
Wear indicator Prepared for wear indicator	WVA number 21421,21422	Accessories With accessories With anti-squeal shim With brake caliper bolts

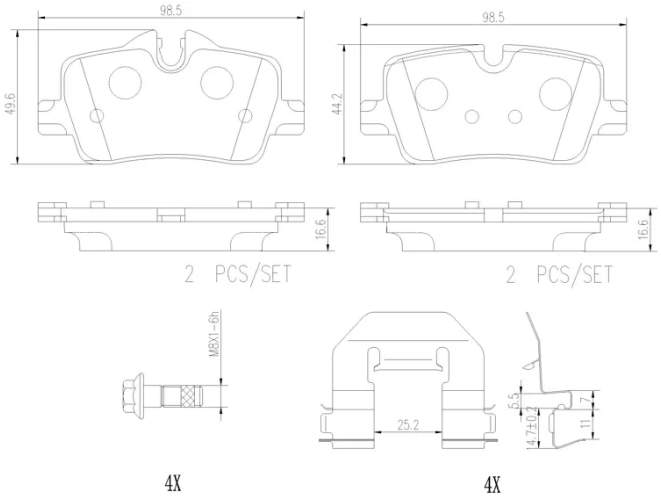

COMPATIBLE OE PART NUMBERS

34206888825	BMW
34208844393	BMW