BRAKE PAD PRIME CERAMIC P85073N

The P85073N NAO brake pad is synonymous with reliability

Brembo NAO brake pads stand out for their ultimate braking comfort, reduced friction wear and low dust mission, which makes for cleaner rims and reduced maintenance requirements. The advanced friction material in keeping with the strictest environmental standards is the main distinguishing feature of NAO compounds.

- OE-equivalent
- Brembo quality
- Safety
- Comfort
- Durability
- Dust reduction
- With accessories

Technical specifications

EAN code
8020584100103

Axle
Rear

Thickness
17 mm

Width
105 mm

Height
56 mm

Braking system
Lucas

Wear indicator
Prepared for wear indicator

WVA number
23914

Accessories
With accessories
With anti-squeal shim
With brake caliper bolts

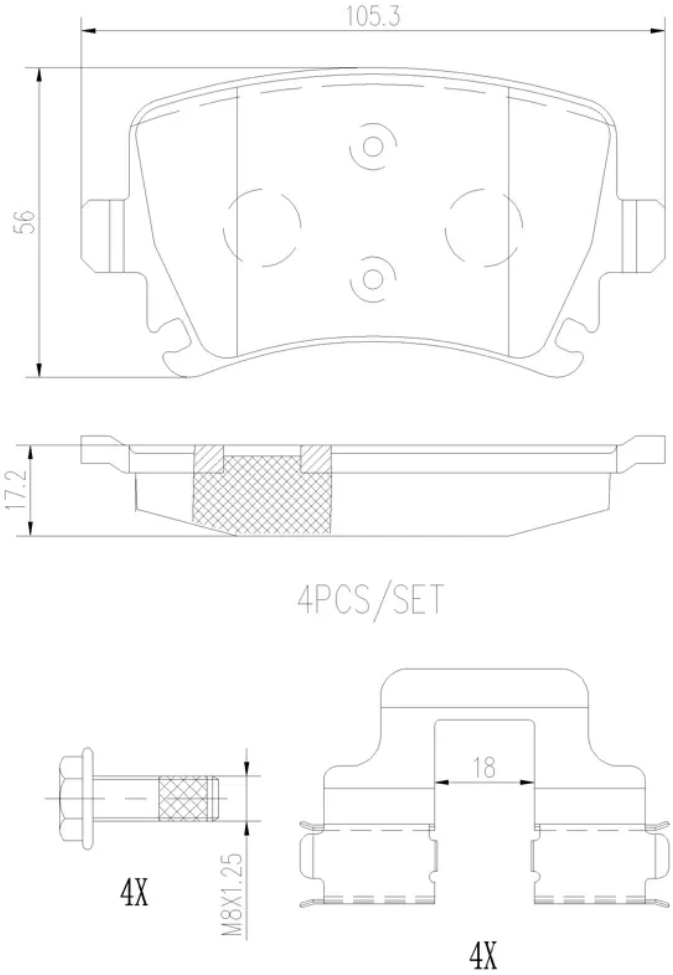

COMPATIBLE VEHICLES

COMPATIBLE OE PART NUMBERS

1K0698451	AUDI
1K0698451D	AUDI
1K0698451F	AUDI
1K0698451G	AUDI
1K0698451H	AUDI
1K0698451P	AUDI
3C0698451	AUDI
3C0698451B	AUDI
3C0698451D	AUDI
4F0698451A	AUDI
4F0698451B	AUDI
4F0698451D	AUDI
4F0698451E	AUDI
8E0698451F	AUDI
8E0698451J	AUDI
8E0698451M	AUDI
JZW698451D	AUDI
L8E0698451J	AUDI
4FD698451	AUDI (FAW)
L4FD698451	AUDI (FAW)
1K0698451	SEAT
1K0698451D	SEAT
1K0698451F	SEAT
1K0698451G	SEAT
1K0698451H	SEAT
1K0698451P	SEAT
3C0698451	SEAT
3C0698451B	SEAT
3C0698451D	SEAT
4F0698451A	SEAT
4F0698451B	SEAT
4F0698451D	SEAT
4F0698451E	SEAT
8E0698451F	SEAT
8E0698451J	SEAT
8E0698451M	SEAT
JZW698451D	SEAT
1K0698451	SKODA
1K0698451D	SKODA
1K0698451F	SKODA
1K0698451G	SKODA
1K0698451H	SKODA
1K0698451P	SKODA
3C0698451	SKODA
3C0698451B	SKODA

3C0698451D	SKODA
4F0698451A	SKODA
4F0698451B	SKODA
4F0698451D	SKODA
4F0698451E	SKODA
8E0698451F	SKODA
8E0698451J	SKODA
8E0698451M	SKODA
JZW698451D	SKODA
1K0698451	VW
1K0698451D	VW
1K0698451F	VW
1K0698451G	VW
1K0698451H	VW
1K0698451P	VW
1K0698451S	VW
3C0698451	VW
3C0698451B	VW
3C0698451D	VW
4F0698451A	VW
4F0698451B	VW
4F0698451D	VW
4F0698451E	VW
8E0698451F	VW
8E0698451J	VW
8E0698451M	VW
8P0098601M	VW
8P0098601N	VW
JZW698451D	VW
JZW698601BH	VW
L1K0698451G	VW (FAW)
L1K0698451H	VW (FAW)
L1TD698451	VW (FAW)
L3C0698451B	VW (FAW)