BRAKE DISC XTRA
09.A966.1X

The 09.A966.1X Xtra brake disc is synonymous with reliability

The Brembo Xtra brake disc features holes on the braking surface. The holes are designed to improve the cooling of the braking system, to generate greater fading resistance and grip in the initial stages of braking. The sports look is also enhanced by the presence of the UV paint.

- Brembo quality
- ECE-R90 certificate
- Performance
- Sports driving
- Sporty look
- Anti-corrosion

Technical specifications

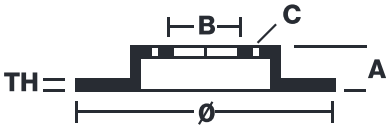

EAN code 8020584217757	Diameter Ø 340 mm	
Thickness (TH) 32 mm	Height (A) 83 mm	Number of holes (C) 5
Brake disc type Ventilated	Centering (B) 112 mm	Min. thickness 29,8 mm
Tightening torque 112 Nm		

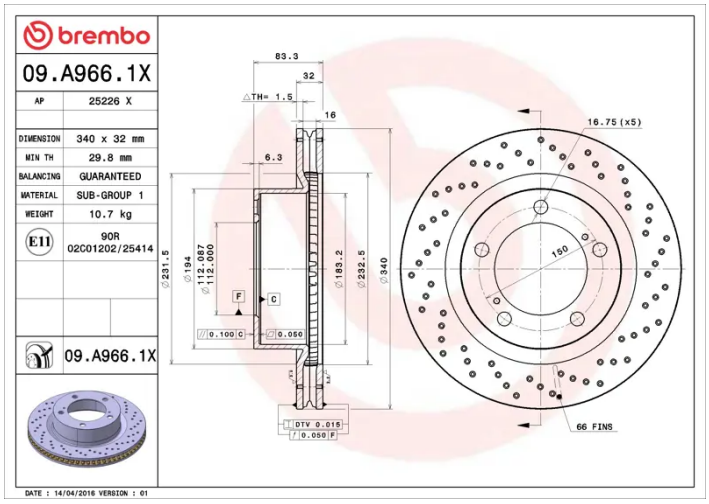

COMPATIBLE VEHICLES

COMPATIBLE OE PART NUMBERS

4351260180	LEXUS
4351260180	TOYOTA
4351260180	TOYOTA (FAW)