BRAKE DISC MAX
09.5587.75

The 09.5587.75 Max brake disc is synonymous with reliability

The Brembo Max brake disc features grooves on the braking surface. The special shape of the grooves generates greater fading resistance and constant renewal of friction material, quickly restoring optimum braking conditions. The UV paint completes the sporty look.

- Brembo quality
- ECE-R90 certificate
- Performance
- Sports driving
- Sporty look
- Anti-corrosion

Technical specifications

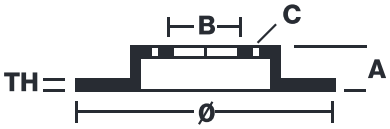

EAN code 8020584015308	Axle Front	Diameter Ø 257 mm
Thickness (TH) 22 mm	Height (A) 34 mm	Number of holes (C) 4
Brake disc type Ventilated	Centering (B) 86 mm	Min. thickness 20 mm
Tightening torque 100 Nm		

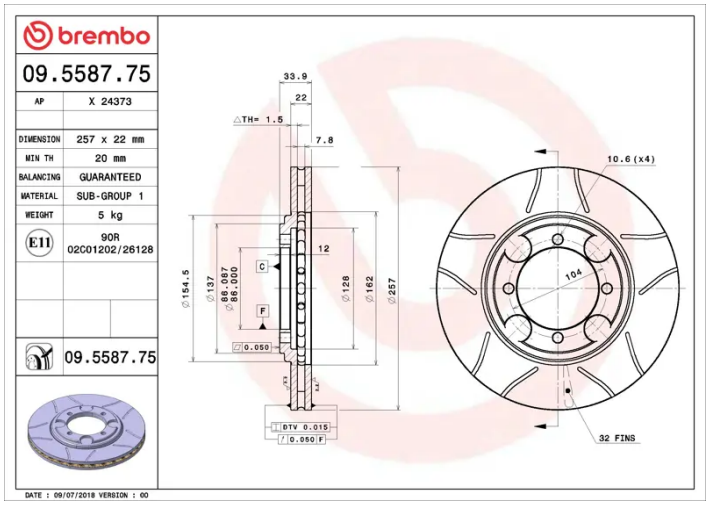

COMPATIBLE VEHICLES

COMPATIBLE OE PART NUMBERS

5171228300	HYUNDAI