BRAKE PAD
P 30 153

The P 30 153 brake pad is synonymous with reliability

The Brembo brake pad guarantees ultimate safety when braking thanks to the use of more than 100 different compounds, designed according to the type of vehicle and use. Stopping distances reduced to a minimum, maximum driving comfort and silent operation are the most important features of Brembo materials. Brembo brake pads are supplied together with an extensive range of accessories and assembly kits for professional-standard installation.

- OE-equivalent
- Brembo quality
- ECE-R90 certificate
- Safety
- Performance
- Comfort
- With accessories

Technical specifications

EAN code 8020584125168	Axle Rear	Thickness 16 mm
Width 123 mm	Height 51 mm	
Wear indicator Acoustic	WVA number 26543,26544,26545	Accessories With accessories With anti-squeal shim With piston clip

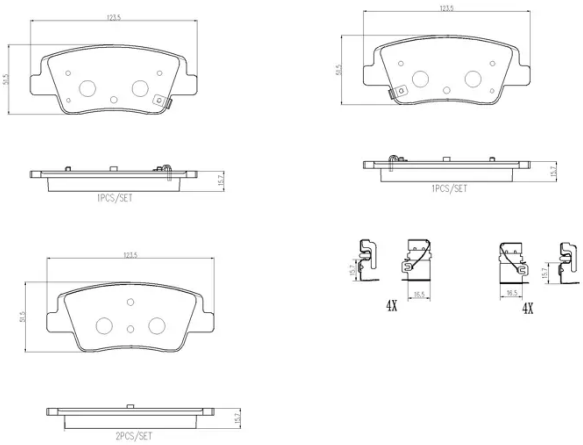

COMPATIBLE OE PART NUMBERS

58302CGA50	HYUNDAI
58302GIA60	HYUNDAI