BRAKE PAD
P 48 004

The P 48 004 brake pad is synonymous with reliability

The Brembo brake pad guarantees ultimate safety when braking thanks to the use of more than 100 different compounds, designed according to the type of vehicle and use. Stopping distances reduced to a minimum, maximum driving comfort and silent operation are the most important features of Brembo materials. Brembo brake pads are supplied together with an extensive range of accessories and assembly kits for professional-standard installation.

- OE-equivalent
- Brembo quality
- ECE-R90 certificate
- Safety
- Performance
- Comfort
- With accessories

Technical specifications

EAN code 8020584126356	Axle Rear	Thickness 18 mm
Width 119 mm	Height 58 mm	
Wear indicator Electric	Accessories With accessories With anti-squeal shim With piston clip	

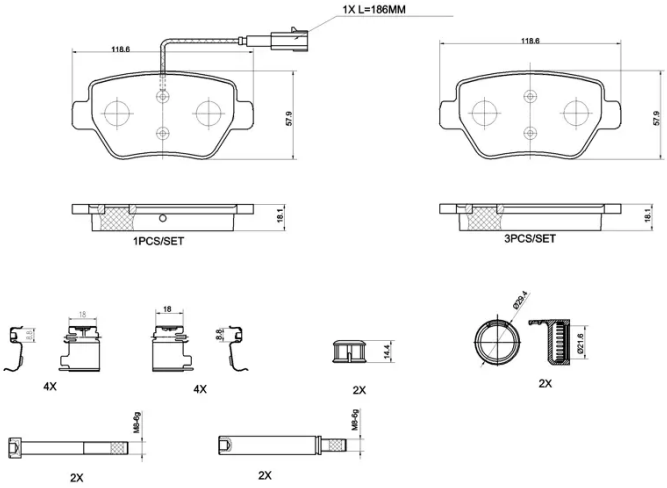

COMPATIBLE VEHICLES

COMPATIBLE OE PART NUMBERS

980156042	MASERATI