BRAKE DISC PAINTED 09.A752.21

The 09.A752.21 painted brake disc is synonymous with reliability

The Brembo brake disc with special UV paint treatment guarantees superior corrosion resistance for the product, thanks to the protective coating on the outer edges and on the disc hub. The UV paint not only gives the disc a clean, shiny appearance but is also beneficial for the environment as the water-based UV paint treatment does not require the use of chemical solvents and is a low energy consumption process.

- OE-equivalent
- Brembo quality
- ECE-R90 certificate
- Safety
- High carbon
- Anti-corrosion
- PVT ventilation
- Fastening screws

Technical specifications

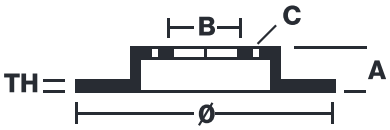

EAN code 8020584219782	Axle Front	Diameter Ø 340 mm
Thickness (TH) 28 mm	Height (A) 63 mm	Number of holes (C) 5
Brake disc type Ventilated	Centering (B) 68 mm	Min. thickness 26 mm

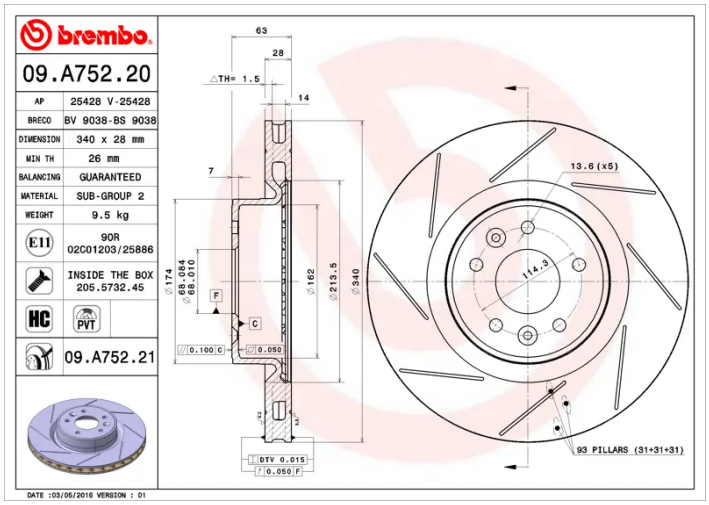

COMPATIBLE VEHICLES

COMPATIBLE OE PART NUMBERS

402060019R	RENAULT