BRAKE DISC COMPOSITE 09.C418.13

Composite brake disc 09.C418.13 belongs to Brembo Premium Line

The Composite brake disc is dedicated to the highest-performance BMW applications and is perfectly interchangeable with the original disc. It has an aluminium hat connected to the special cast iron braking surface by steel pins. This solution makes the disc lighter for improved handling of the car.

- OE-equivalent
- Brembo quality
- ECE-R90 certificate
- Weight reduction
- High carbon
- Bi-Material Brake Disc
- Anti-corrosion
- Fastening screws
- Fading resistance

Technical specifications

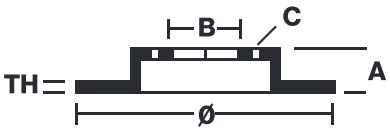

EAN code **8020584239346**	Axle **Rear**	Diameter Ø **345** mm
Thickness (TH) **24** mm	Height (A) **63** mm	Number of holes (C) **5**
Brake disc type **Ventilated**	Centering (B) **75** mm	Min. thickness **22,4** mm

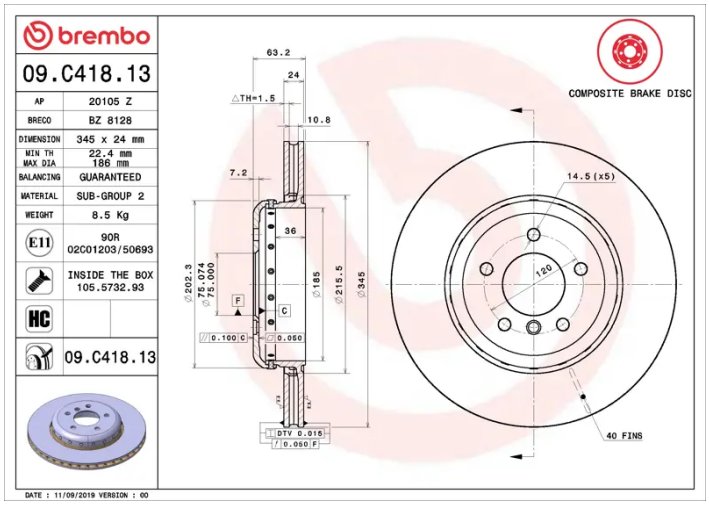

COMPATIBLE VEHICLES

COMPATIBLE OE PART NUMBERS

34216763827	BMW
34216763827	BMW (BRILLIANCE)