BRAKE PAD PRIME CERAMIC P06094N

The P06094N NAO brake pad is synonymous with reliability

Brembo NAO brake pads stand out for their ultimate braking comfort, reduced friction wear and low dust mission, which makes for cleaner rims and reduced maintenance requirements. The advanced friction material in keeping with the strictest environmental standards is the main distinguishing feature of NAO compounds.

- OE-equivalent
- Brembo quality
- Safety
- Comfort
- Durability
- Dust reduction
- With accessories

Technical specifications

EAN code 8020584088050	Axle Rear	Thickness 16 mm
Width 123 mm	Height 47 mm	Braking system Teves
Wear indicator Prepared for wear indicator	WVA number 25331,25332	Accessories With anti-squeal shim

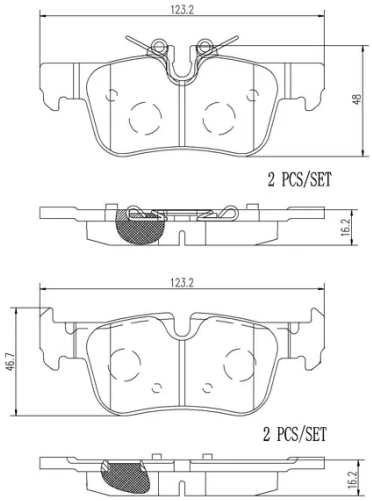

COMPATIBLE VEHICLES

COMPATIBLE OE PART NUMBERS

34201543683	BMW
34206885547	BMW
34216859917	BMW
34216860403	BMW
34218843651	BMW
8843651	BMW
34218867488	MINI