08.A826.17 SUPERSEDED BY **08.A826.47**

The reference **08.A826.17** is replaced by **08.A826.47** due to a change of the dimension B.

The **OES Renault** corresponding to the new Brembo reference are:
432027112R, 402020003R, 402022291R, 432022434R.

08.A826.17
Rear axle

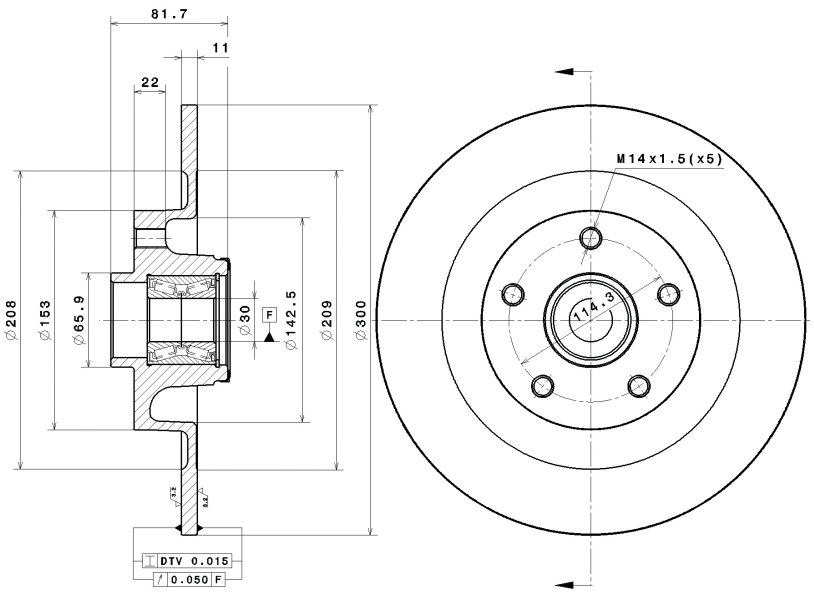

Breco reference:
BY 7782

AP reference:
14990 Y

08.A826.47
Rear axle

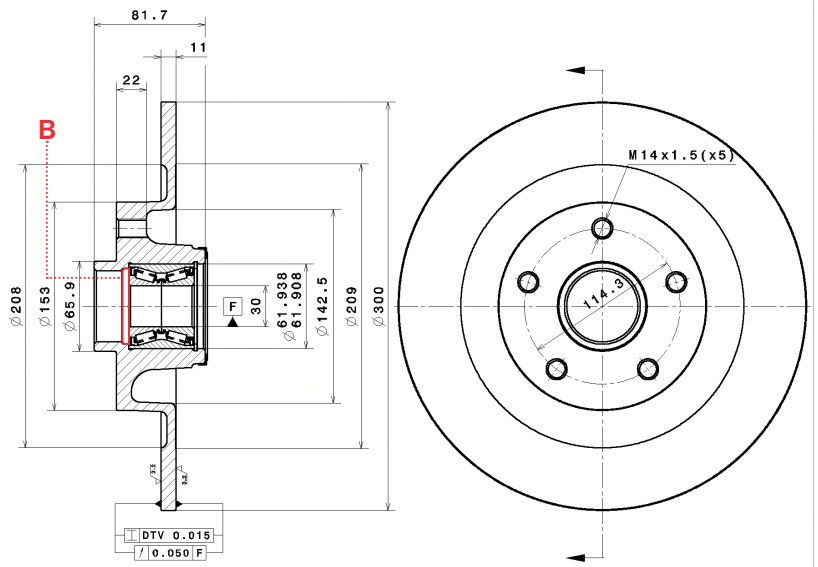

Breco reference:
BY 6162

AP reference:
15170 Y