BRAKE DISC
08.A753.37

The 08.A753.37 brake disc is synonymous with reliability

The Brembo brake disc is fully interchangeable with an Original Equipment brake disc. The control of the entire production cycle allows Brembo to offer brake discs with outstanding performance levels, reliability, durability and comfort in all conditions of use. All Brembo brake discs are accompanied by the ECE-R90 homologation.

- OE-equivalent
- Brembo quality
- ECE-R90 certificate
- Safety
- Bearing kit

Technical specifications

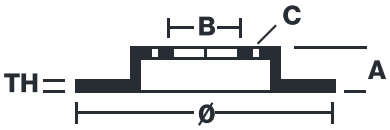

EAN code 8020584216804	Axle Rear	Diameter Ø 290 mm
Thickness (TH) 11 mm	Height (A) 105 mm	Number of holes (C) 5
Brake disc type Solid	Centering (B) 30 mm	Min. thickness 9,5 mm

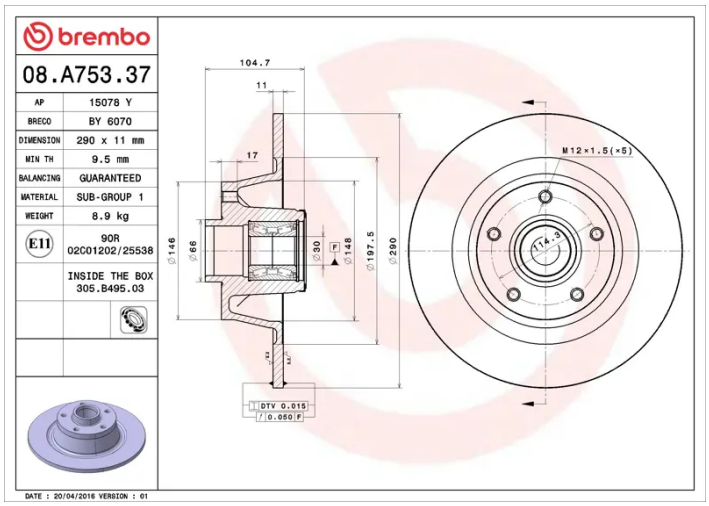

COMPATIBLE VEHICLES

COMPATIBLE OE PART NUMBERS

402023273R	RENAULT
432020020R	RENAULT
432020021R	RENAULT