X-STYLE BRAKE CALIPER KIT F AL H42

Brembo F AL H42 aluminium brake caliper kit

Brembo aluminium brake caliper kits are dedicated to car owners who are passionate and care deeply about the aesthetics of their vehicle. Check compatibility with your car and choose your favourite colour

- OE-equivalent
- Brembo quality
- Safety
- Performance
- Sporty look
- With accessories
- Kit

Technical specifications

EAN code	Axle	Diameter
8020584550632	Front	40 mm
Number of pistons	**Braking system**	**Position**
4	BREMBO	Left, Right

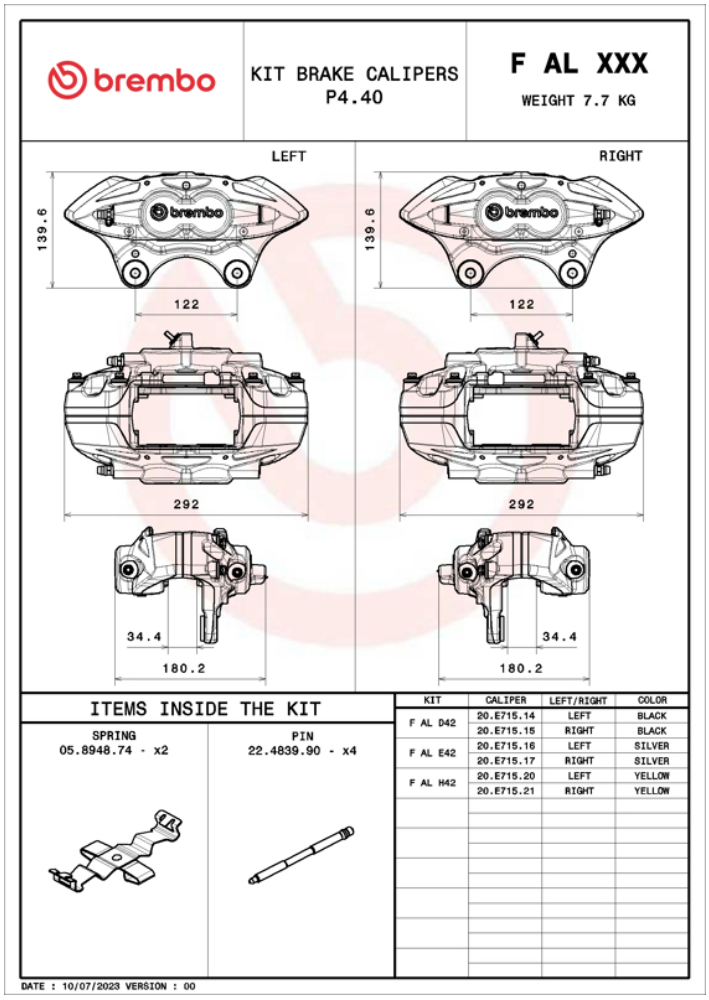

COMPATIBLE VEHICLES

COMPATIBLE OE PART NUMBERS

34116799469	BMW
34116799470	BMW
6875651	BMW
6875652	BMW
6875653	BMW
6875654	BMW
6875655	BMW
6875656	BMW
68788799	BMW
68788809	BMW