BRAKE DISC PAINTED
08.B439.11

The 08.B439.11 painted brake disc is synonymous with reliability

The Brembo brake disc with special UV paint treatment guarantees superior corrosion resistance for the product, thanks to the protective coating on the outer edges and on the disc hub. The UV paint not only gives the disc a clean, shiny appearance but is also beneficial for the environment as the water-based UV paint treatment does not require the use of chemical solvents and is a low energy consumption process.

- OE-equivalent
- Brembo quality
- ECE-R90 certificate
- Safety
- Anti-corrosion
- Fastening screws

Technical specifications

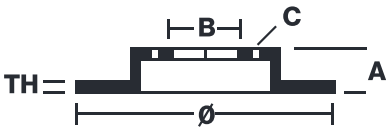

EAN code 8020584034576	Diameter Ø 260 mm	
Thickness (TH) 9 mm	Height (A) 49 mm	Number of holes (C) 5
Brake disc type Solid	Centering (B) 64 mm	Min. thickness 8 mm

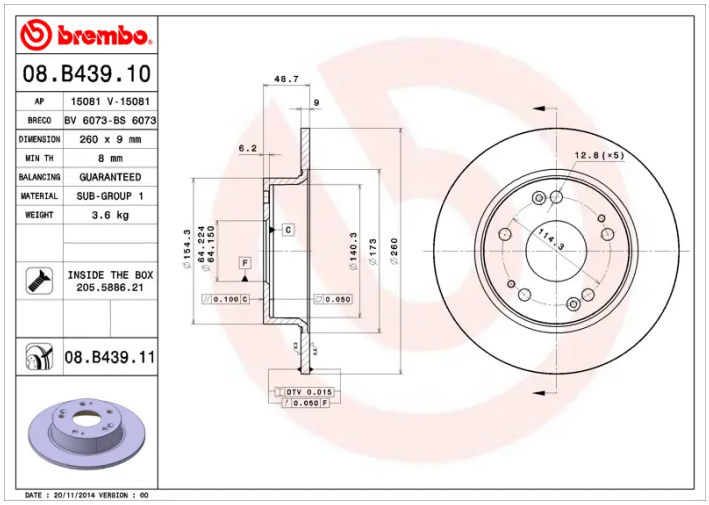

COMPATIBLE VEHICLES

COMPATIBLE OE PART NUMBERS

42510SDAA00	ACURA
42510SDAA00	HONDA
42510SEA000	HONDA