BRAKE DISC
09.6763.60

The 09.6763.60 brake disc is synonymous with reliability

The Brembo brake disc is fully interchangeable with an Original Equipment brake disc. The control of the entire production cycle allows Brembo to offer brake discs with outstanding performance levels, reliability, durability and comfort in all conditions of use. All Brembo brake discs are accompanied by the ECE-R90 homologation.

- OE-equivalent
- Brembo quality
- ECE-R90 certificate
- Safety
- High carbon

Technical specifications

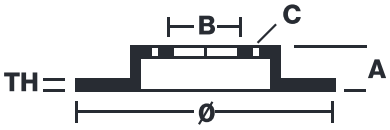

EAN code 8020584676363	Diameter Ø 322 mm	
Thickness (TH) 30 mm	Height (A) 134 mm	Number of holes (C) 8
Brake disc type Ventilated	Centering (B) 215 mm	Min. thickness 27,8 mm

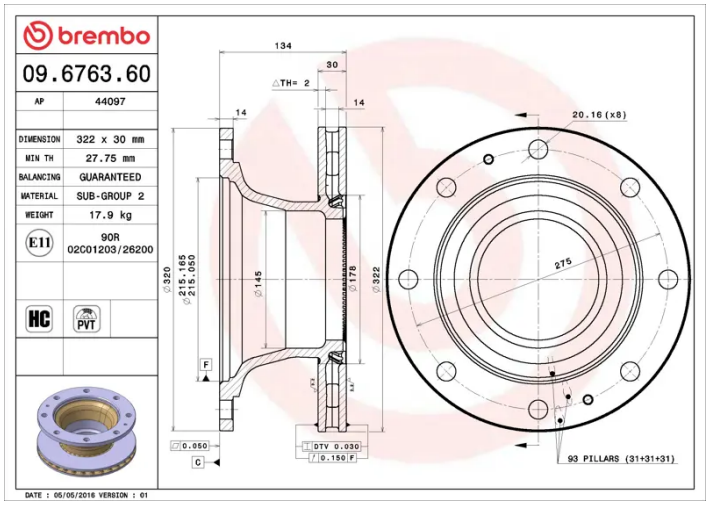

COMPATIBLE OE PART NUMBERS

2996009	IVECO
7187569	IVECO