BRAKE DISC PAINTED 09.6924.11

The 09.6924.11 painted brake disc is synonymous with reliability

The Brembo brake disc with special UV paint treatment guarantees superior corrosion resistance for the product, thanks to the protective coating on the outer edges and on the disc hub. The UV paint not only gives the disc a clean, shiny appearance but is also beneficial for the environment as the water-based UV paint treatment does not require the use of chemical solvents and is a low energy consumption process.

- OE-equivalent
- Brembo quality
- ECE-R90 certificate
- Safety
- High carbon
- Anti-corrosion
- Fastening screws

Technical specifications

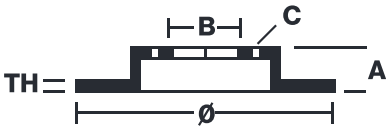

EAN code 8020584013762	Axle Front	Diameter Ø 296 mm
Thickness (TH) 22 mm	Height (A) 76 mm	Number of holes (C) 5
Brake disc type Ventilated	Centering (B) 79 mm	Min. thickness 20,4 mm
Tightening torque 120 Nm		

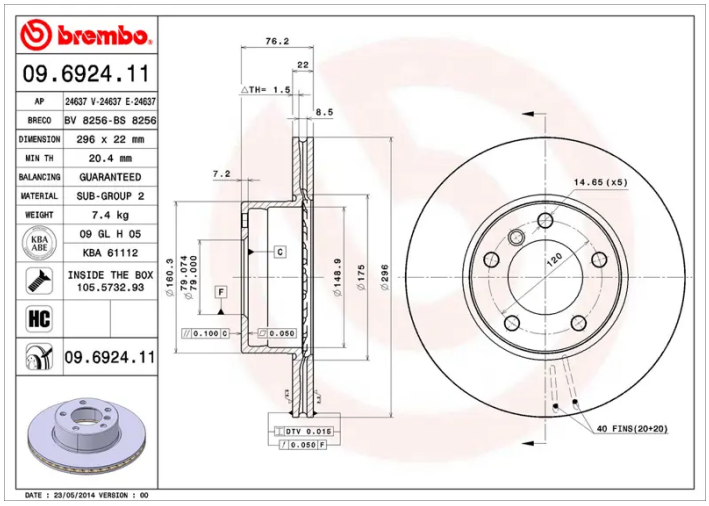

COMPATIBLE VEHICLES

COMPATIBLE OE PART NUMBERS

34111163013	BMW
34111163081	BMW
34111164839	BMW
34116767061	BMW