BRAKE DISC
08.6899.10

The 08.6899.10 brake disc is synonymous with reliability

The Brembo brake disc is fully interchangeable with an Original Equipment brake disc. The control of the entire production cycle allows Brembo to offer brake discs with outstanding performance levels, reliability, durability and comfort in all conditions of use. All Brembo brake discs are accompanied by the ECE-R90 homologation.

- OE-equivalent
- Brembo quality
- ECE-R90 certificate
- Safety

Technical specifications

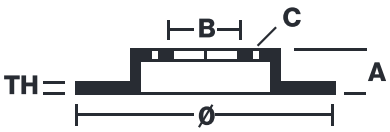

EAN code	8020584689912
Diameter Ø	234 mm
Thickness (TH)	7 mm
Height (A)	39 mm
Number of holes (C)	4
Brake disc type	Solid
Centering (B)	68 mm
Min. thickness	6 mm
Tightening torque	108 Nm

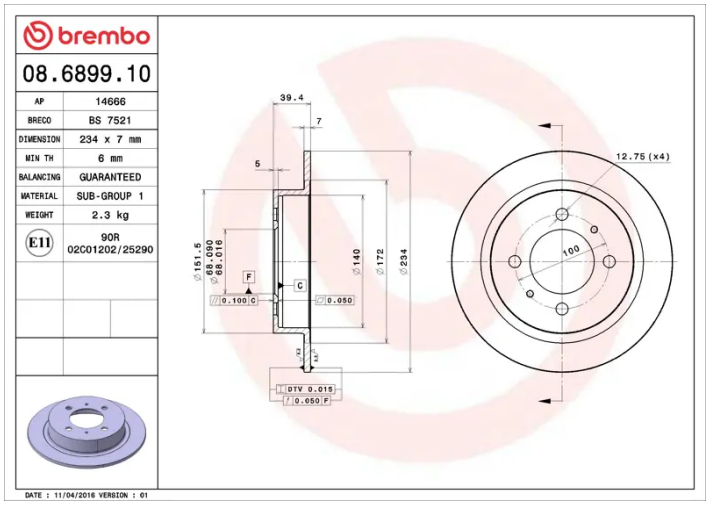

COMPATIBLE VEHICLES

COMPATIBLE OE PART NUMBERS

4320658Y00	NISSAN
4320658Y01	NISSAN
4320658Y02	NISSAN