BRAKE DISC XTRA
09.A800.1X

The 09.A800.1X Xtra brake disc is synonymous with reliability

The Brembo Xtra brake disc features holes on the braking surface. The holes are designed to improve the cooling of the braking system, to generate greater fading resistance and grip in the initial stages of braking. The sports look is also enhanced by the presence of the UV paint.

- Brembo quality
- ECE-R90 certificate
- Performance
- Sports driving
- Sporty look
- High carbon
- Anti-corrosion
- Fastening screws

Technical specifications

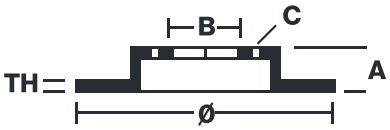

EAN code 8020584343401	Axle Rear	Diameter Ø 330 mm
Thickness (TH) 20 mm	Height (A) 64,1 mm	Number of holes (C) 5
Brake disc type Ventilated	Centering (B) 75 mm	Min. thickness 18,6 mm

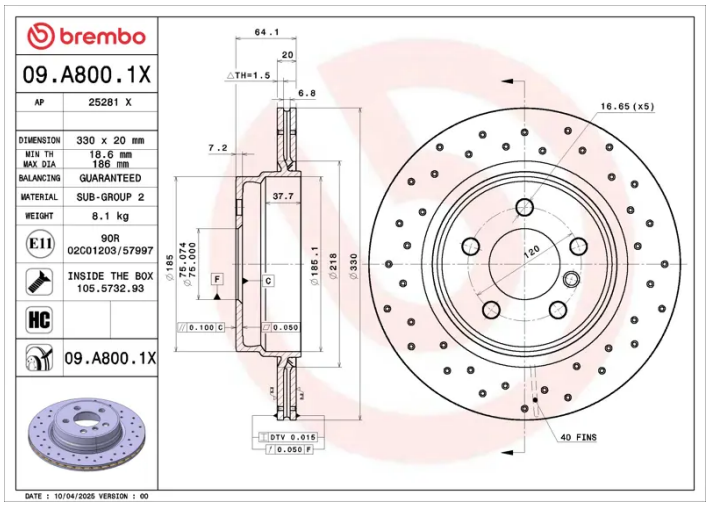

COMPATIBLE OE PART NUMBERS

34216793127	BMW (BRILLIANCE)