Disc
09.N213.11

brembo AFTERMARKET

Disc technical data

Axle Rear

Diameter
350 mm

Overall height (A)
68,2 mm

Centring diameter (B)
72 mm

Number of holes (C)
5

Thickness (TH)
28 mm

Minimum thickness
26,4 mm

Tightening torque
Nm

Unit per box
1

EANCode
8020584225370

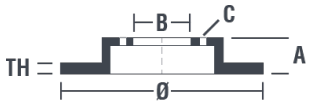

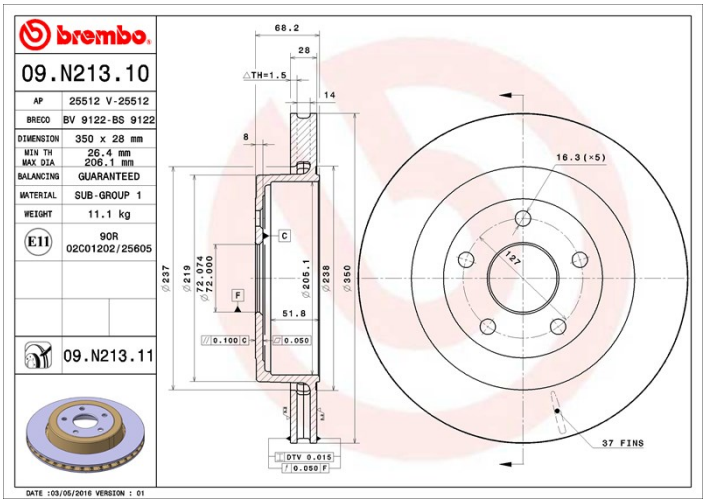

Brand part numbers

Brembo	AP	Breco
09.N213.11	25512 V	BV 9122

Technical specifications

UV Disc
The UV coating process provides a superior corrosion resistance and full disc protection.

Compatible vehicles

JEEP			
Model	Type	Kw	Year
GRAND CHEROKEE III (WH, WK)	6.1 SRT8 4x4	313	03/06 12/10

OE Part number

Compatible OE codes	
JEEP	5290731AA
JEEP	5290731AB