X-STYLE BRAKE CALIPER KIT F AL D12

Brembo F AL D12 aluminium brake caliper kit

Brembo aluminium brake caliper kits are dedicated to car owners who are passionate and care deeply about the aesthetics of their vehicle. Check compatibility with your car and choose your favourite colour

- OE-equivalent
- Brembo quality
- Safety
- Performance
- Sporty look
- With accessories
- Kit

Technical specifications

EAN code 8020584548066	Axle Front	Diameter 42 mm
Number of pistons 4	Braking system BREMBO	Position Left, Right

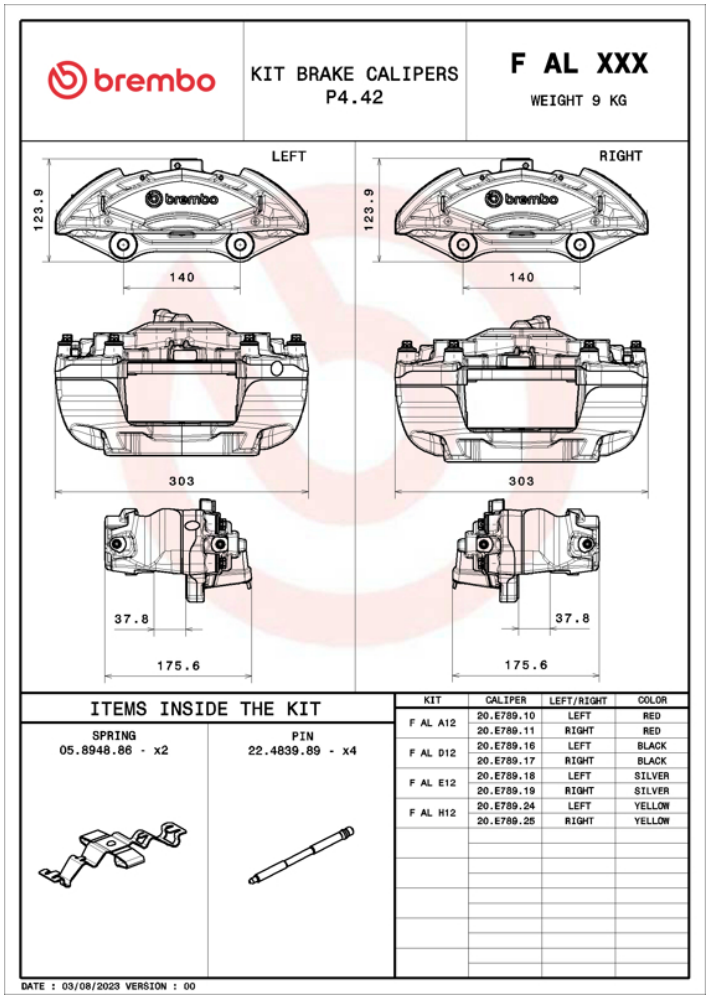

KIT	CALIPER	LEFT/RIGHT	COLOR
F AL A12	20.E789.10	LEFT	RED
	20.E789.11	RIGHT	RED
F AL D12	20.E789.16	LEFT	BLACK
	20.E789.17	RIGHT	BLACK
F AL E12	20.E789.18	LEFT	SILVER
	20.E789.19	RIGHT	SILVER
F AL H12	20.E789.24	LEFT	YELLOW
	20.E789.25	RIGHT	YELLOW

COMPATIBLE VEHICLES

COMPATIBLE OE PART NUMBERS

A0114219198	MERCEDES-BENZ
A0114219298	MERCEDES-BENZ