BRAKE DISC DUAL CAST 09.C127.33

Dual Cast brake disc 09.C127.33 belongs to Brembo Premium Line

The Dual Cast brake disc is an exclusive Brembo solution characterised by a cast iron braking surface and the aluminium hat, which combine the advantages of cast iron behaviour at high temperatures with the light weight of aluminium. This results in a lighter weight and less thermal deformation for improved braking system performance.

- OE-equivalent
- Brembo quality
- ECE-R90 certificate
- Weight reduction
- High carbon
- Bi-Material Brake Disc
- Anti-corrosion
- Fading resistance

Technical specifications

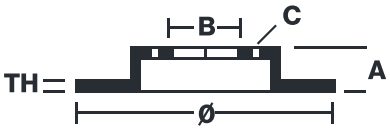

EAN code 8020584316351	Diameter Ø 390 mm	
Thickness (TH) 36 mm	Height (A) 64,5 mm	Number of holes (C) 5
Brake disc type Ventilated	Centering (B) 67 mm	Min. thickness 33 mm

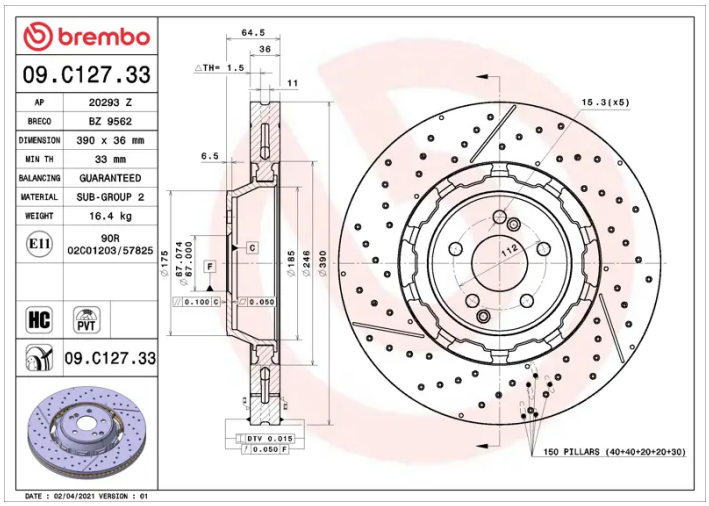

COMPATIBLE VEHICLES

COMPATIBLE OE PART NUMBERS

2224212612	MERCEDES-BENZ
A2224212612	MERCEDES-BENZ