BRAKE DISC DUAL CAST
09.D481.33

Dual Cast brake disc 09.D481.33 belongs to Brembo Premium Line

The Dual Cast brake disc is an exclusive Brembo solution characterised by a cast iron braking surface and the aluminium hat, which combine the advantages of cast iron behaviour at high temperatures with the light weight of aluminium. This results in a lighter weight and less thermal deformation for improved braking system performance.

- OE-equivalent
- Brembo quality
- ECE-R90 certificate
- Weight reduction
- High carbon
- Bi-Material Brake Disc
- Anti-corrosion
- PVT ventilation
- Fading resistance

Technical specifications

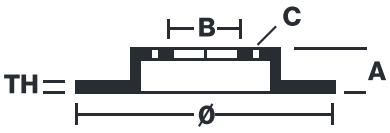

EAN code 8020584329962	Axle Front	Diameter Ø 420 mm
Thickness (TH) 40 mm	Height (A) 52,7 mm	Number of holes (C) 5
Brake disc type Ventilated	Centering (B) 68 mm	Min. thickness 38 mm

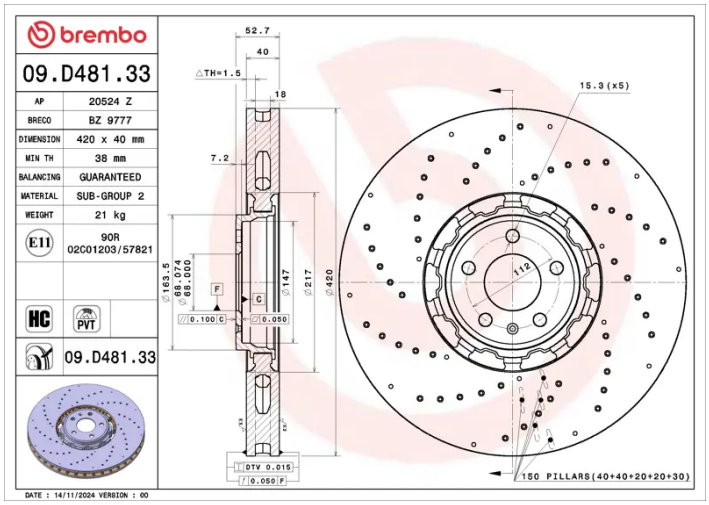

COMPATIBLE VEHICLES

COMPATIBLE OE PART NUMBERS

4M8615301C	AUDI
4M8615301D	AUDI