BRAKE DISC
09.E166.10

The 09.E166.10 brake disc is synonymous with reliability

The Brembo brake disc is fully interchangeable with an Original Equipment brake disc. The control of the entire production cycle allows Brembo to offer brake discs with outstanding performance levels, reliability, durability and comfort in all conditions of use. All Brembo brake discs are accompanied by the ECE-R90 homologation.

- OE-equivalent
- Brembo quality
- ECE-R90 certificate
- Safety
- High carbon

Technical specifications

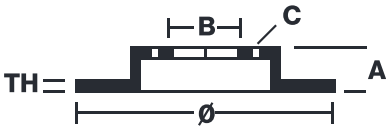

EAN code 8020584313589	Diameter Ø 377 mm	
Thickness (TH) 45 mm	Height (A) 150 mm	Number of holes (C) 8
Brake disc type Ventilated	Centering (B) 225 mm	Min. thickness 37 mm

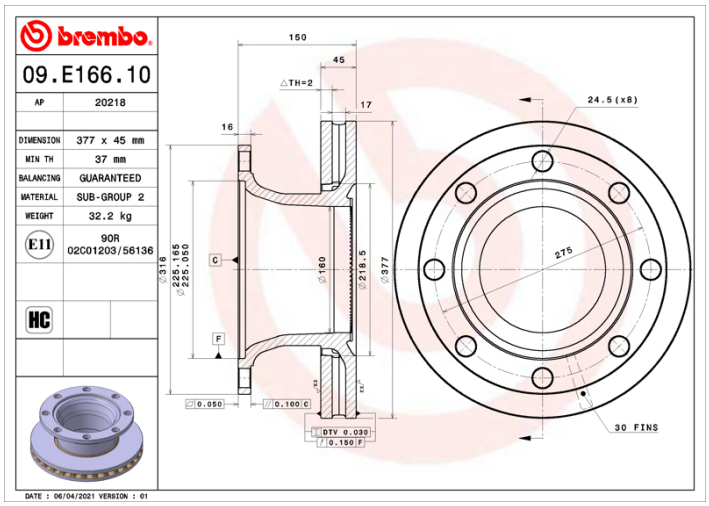

COMPATIBLE OE PART NUMBERS

68325372	MERITOR
8325371	MERITOR
8325373	MERITOR
MBR9014	MERITOR