DRUM
14.E308.50

The 14.E308.50 drum is synonymous with reliability

Brembo has developed several design solutions for drum brakes which combine multiple materials to reduce the overall weight. The most popular range of lamellar graphite cast iron drums is supplemented by cast iron drums with a steel sprocket flange and aluminium drums, whereby only the inner part of the drum on which the shoes operate are made of lamellar cast iron, namely the brake band. Additionally drums with built-in bearing kit and hub are added to this range.

- OE-equivalent
- Brembo quality
- Safety
- Durability
- Bearing kit

Technical specifications

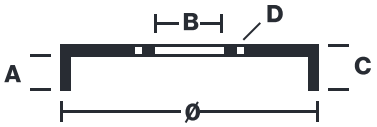

EAN code 8020584326008	Axle Rear	Diameter 203,1 mm
Width 42,8 mm	Height 71,7	Number of holes 4
Max diameter 204,4 mm	Bearing kit	

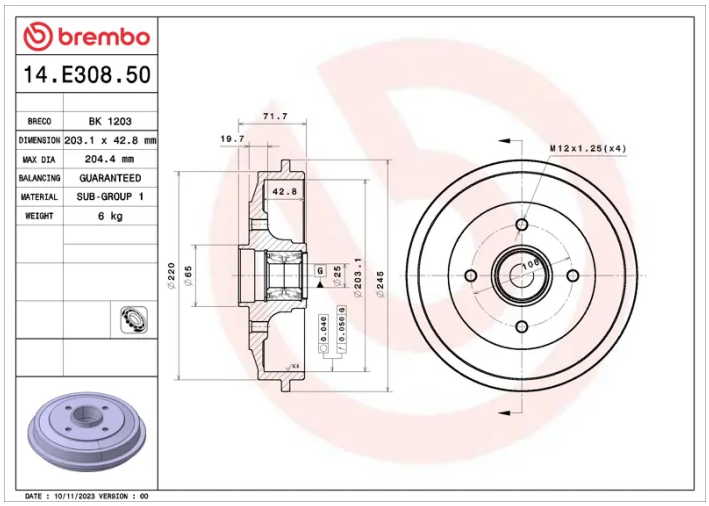

COMPATIBLE VEHICLES