BRAKE DISC
08.2714.20

The 08.2714.20 brake disc is synonymous with reliability

The Brembo brake disc is fully interchangeable with an Original Equipment brake disc. The control of the entire production cycle allows Brembo to offer brake discs with outstanding performance levels, reliability, durability and comfort in all conditions of use. All Brembo brake discs are accompanied by the ECE-R90 homologation.

- OE-equivalent
- Brembo quality
- ECE-R90 certificate
- Safety

Technical specifications

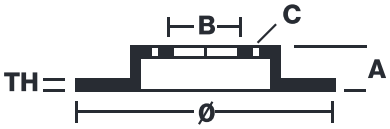

EAN code 8020584271421	Axle Front	Diameter Ø 238 mm
Thickness (TH) 11 mm	Height (A) 58 mm	Number of holes (C) 4
Brake disc type Solid	Centering (B) 75 mm	Min. thickness 9,9 mm
Tightening torque 85 Nm		

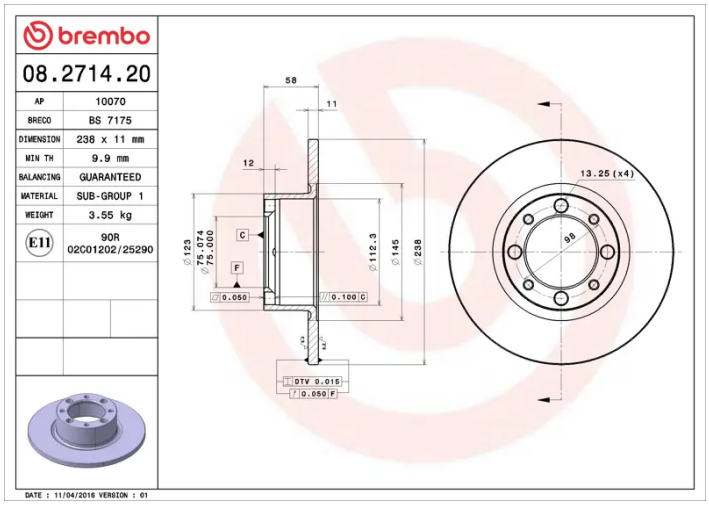

COMPATIBLE VEHICLES

COMPATIBLE OE PART NUMBERS

0043023314	TALBOT
0521548614	TALBOT
27679000	TALBOT
42460000	TALBOT
4246B5	TALBOT
4246E4	TALBOT
42579G	TALBOT
43023314	TALBOT
55184514	TALBOT
58834Y	TALBOT