BRAKE DISC
08.5803.30

The 08.5803.30 brake disc is synonymous with reliability

The Brembo brake disc is fully interchangeable with an Original Equipment brake disc. The control of the entire production cycle allows Brembo to offer brake discs with outstanding performance levels, reliability, durability and comfort in all conditions of use. All Brembo brake discs are accompanied by the ECE-R90 homologation.

- OE-equivalent
- Brembo quality
- ECE-R90 certificate
- Safety
- Fastening screws

Technical specifications

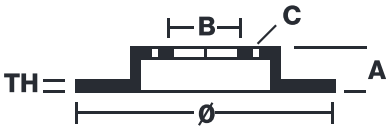

EAN code 8020584580332	Diameter Ø 260 mm	
Thickness (TH) 10 mm	Height (A) 49 mm	Number of holes (C) 5
Brake disc type Solid	Centering (B) 64 mm	Min. thickness 8 mm
Tightening torque 108 Nm		

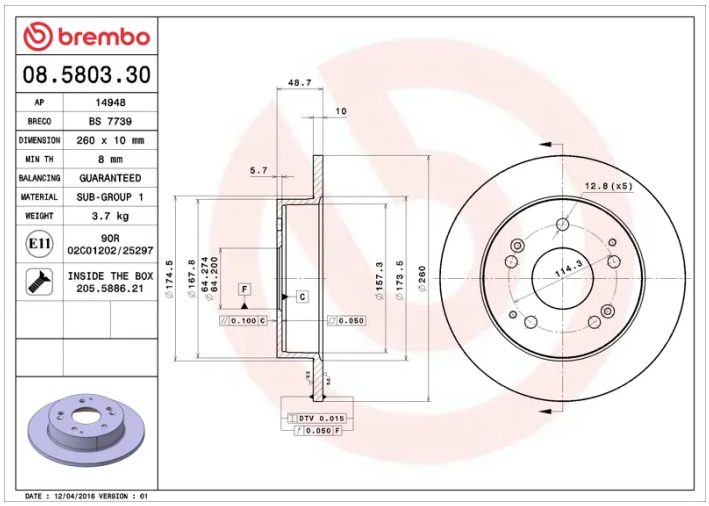

COMPATIBLE VEHICLES

COMPATIBLE OE PART NUMBERS

42510S5TE00	HONDA