BRAKE DISC
08.A730.20

The 08.A730.20 brake disc is synonymous with reliability

The Brembo brake disc is fully interchangeable with an Original Equipment brake disc. The control of the entire production cycle allows Brembo to offer brake discs with outstanding performance levels, reliability, durability and comfort in all conditions of use. All Brembo brake discs are accompanied by the ECE-R90 homologation.

- OE-equivalent
- Brembo quality
- ECE-R90 certificate
- Safety

Technical specifications

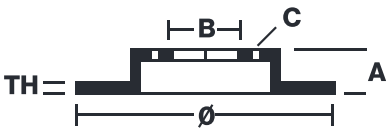

EAN code 8020584038307	Diameter Ø 280 mm	
Thickness (TH) 16 mm	Height (A) 69 mm	Number of holes (C) 5
Brake disc type Solid	Centering (B) 96 mm	Min. thickness 13 mm

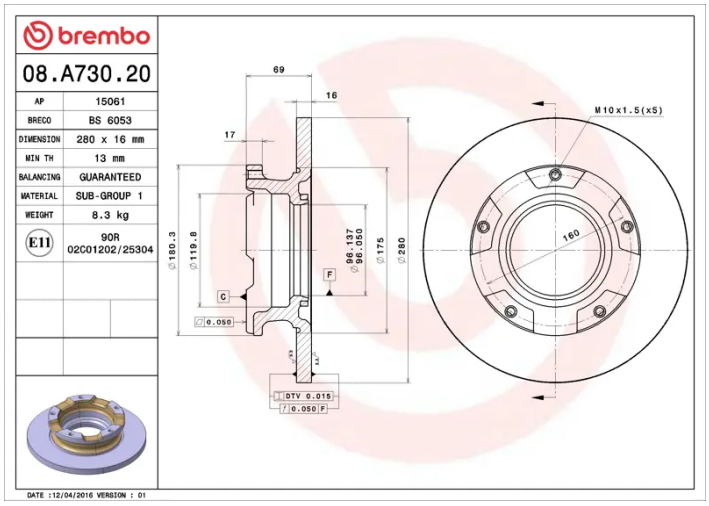

COMPATIBLE VEHICLES

COMPATIBLE OE PART NUMBERS

1371421	FORD
1387152	FORD
1451161	FORD
6C112A097AB	FORD