BRAKE DISC DUAL CAST 09.D411.33

Dual Cast brake disc 09.D411.33 belongs to Brembo Premium Line

The Dual Cast brake disc is an exclusive Brembo solution characterised by a cast iron braking surface and the aluminium hat, which combine the advantages of cast iron behaviour at high temperatures with the light weight of aluminium. This results in a lighter weight and less thermal deformation for improved braking system performance.

- OE-equivalent
- Brembo quality
- ECE-R90 certificate
- Weight reduction
- High carbon
- Bi-Material Brake Disc
- Anti-corrosion
- Fading resistance

Technical specifications

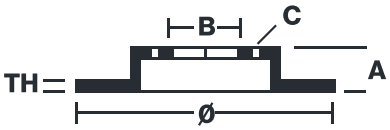

EAN code 8020584316986	Diameter Ø 370 mm	
Thickness (TH) 32 mm	Height (A) 54 mm	Number of holes (C) 5
Brake disc type Ventilated	Centering (B) 67 mm	Min. thickness 30 mm

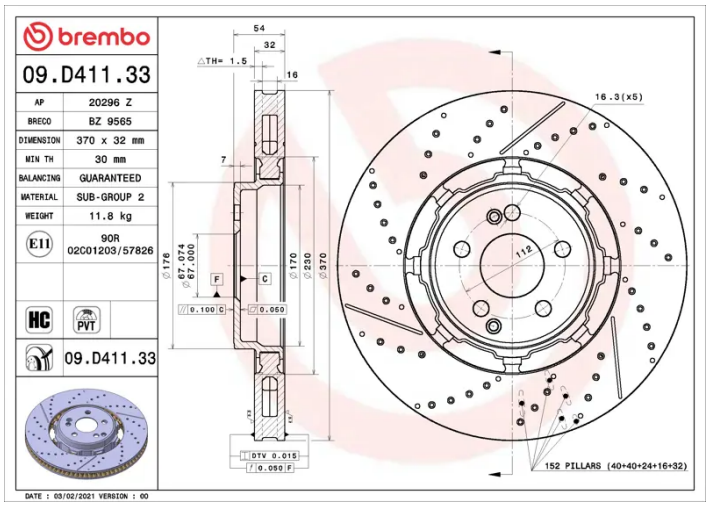

COMPATIBLE VEHICLES

COMPATIBLE OE PART NUMBERS

1674231000	MERCEDES-BENZ
A1674231000	MERCEDES-BENZ