# BRAKE DISC
# 09.A047.20

### The 09.A047.20 brake disc is synonymous with reliability

The Brembo brake disc is fully interchangeable with an Original Equipment brake disc. The control of the entire production cycle allows Brembo to offer brake discs with outstanding performance levels, reliability, durability and comfort in all conditions of use. All Brembo brake discs are accompanied by the ECE-R90 homologation.

- OE-equivalent
- Brembo quality
- ECE-R90 certificate
- Safety
- High carbon
- PVT ventilation

## Technical specifications

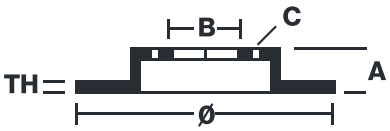


| | | |
|---|---|---|
| EAN code<br>8020584029923 | Diameter Ø<br>294 mm | |
| Thickness (TH)<br>22 mm | Height (A)<br>44 mm | Number of holes (C)<br>4 |
| Brake disc type<br>Ventilated | Centering (B)<br>64 mm | Min. thickness<br>20,4 mm |
| Tightening torque<br>120 Nm | | |

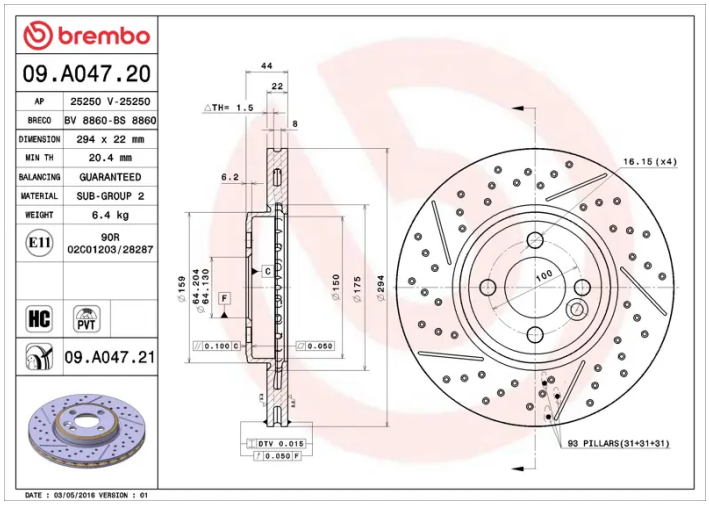


COMPATIBLE VEHICLES

## COMPATIBLE OE PART NUMBERS

| | |
|---|---|
| 34116777826 | MINI |