BRAKE PAD
P 06 113

The P 06 113 brake pad is synonymous with reliability

The Brembo brake pad guarantees ultimate safety when braking thanks to the use of more than 100 different compounds, designed according to the type of vehicle and use. Stopping distances reduced to a minimum, maximum driving comfort and silent operation are the most important features of Brembo materials. Brembo brake pads are supplied together with an extensive range of accessories and assembly kits for professional-standard installation.

- OE-equivalent
- Brembo quality
- ECE-R90 certificate
- Safety
- Performance
- Comfort
- With accessories

Technical specifications

EAN code 8020584117835	Axle Rear	Thickness 17 mm
Width 99 mm	Height 44 mm	Braking system TRW
Wear indicator Prepared for wear indicator	WVA number 21421,21422	Accessories With accessories With anti-squeal shim With brake caliper bolts

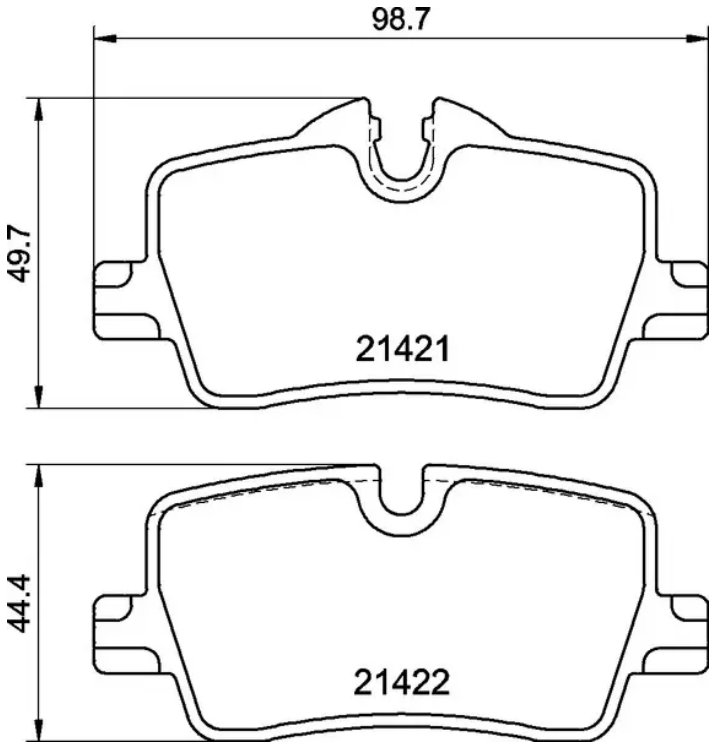

COMPATIBLE OE PART NUMBERS

34206888825	BMW
34208844393	BMW