BRAKE DISC
09.9482.10

The 09.9482.10 brake disc is synonymous with reliability

The Brembo brake disc is fully interchangeable with an Original Equipment brake disc. The control of the entire production cycle allows Brembo to offer brake discs with outstanding performance levels, reliability, durability and comfort in all conditions of use. All Brembo brake discs are accompanied by the ECE-R90 homologation.

- OE-equivalent
- Brembo quality
- ECE-R90 certificate
- Safety
- High carbon

Technical specifications

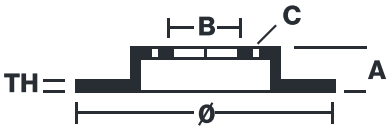

EAN code 8020584948217	Axle Front	Diameter Ø 298 mm
Thickness (TH) 24 mm	Height (A) 67 mm	Number of holes (C) 5
Brake disc type Ventilated	Centering (B) 98 mm	Min. thickness 22 mm
Tightening torque 130 Nm		

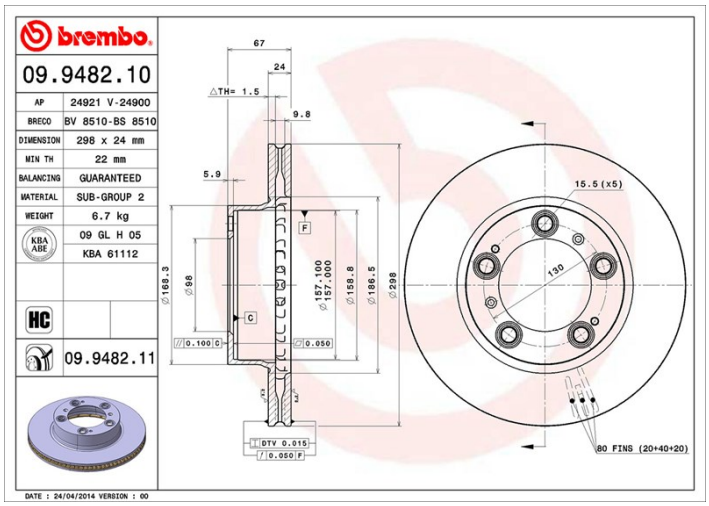

COMPATIBLE VEHICLES

COMPATIBLE OE PART NUMBERS

98635140104	PORSCHE
98635140105	PORSCHE