BRAKE DISC XTRA
09.A967.1X

The 09.A967.1X Xtra brake disc is synonymous with reliability

The Brembo Xtra brake disc features holes on the braking surface. The holes are designed to improve the cooling of the braking system, to generate greater fading resistance and grip in the initial stages of braking. The sports look is also enhanced by the presence of the UV paint.

- Brembo quality
- ECE-R90 certificate
- Performance
- Sports driving
- Sporty look
- High carbon
- Anti-corrosion

Technical specifications

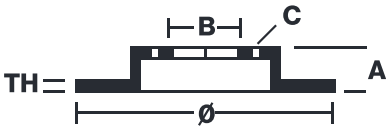

EAN code 8020584217764	Axle Rear	Diameter Ø 345 mm
Thickness (TH) 18 mm	Height (A) 76 mm	Number of holes (C) 5
Brake disc type Ventilated	Centering (B) 112 mm	Min. thickness 16,5 mm
Tightening torque 112 Nm		

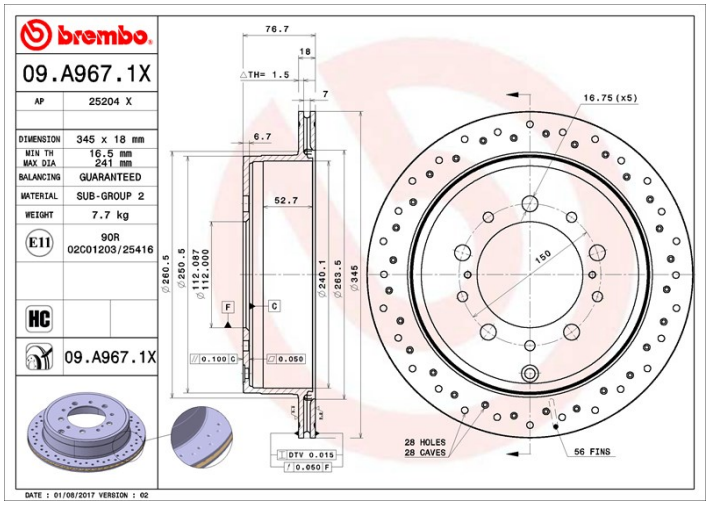

COMPATIBLE VEHICLES