BRAKE DISC MAX
08.4177.75

The 08.4177.75 Max brake disc is synonymous with reliability

The Brembo Max brake disc features grooves on the braking surface. The special shape of the grooves generates greater fading resistance and constant renewal of friction material, quickly restoring optimum braking conditions. The UV paint completes the sporty look.

- Brembo quality
- ECE-R90 certificate
- Performance
- Sports driving
- Sporty look
- Anti-corrosion
- Fastening screws

Technical specifications

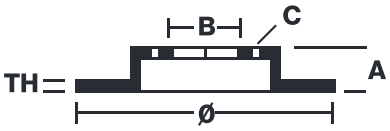

EAN code 8020584011201	Axle Front	Diameter Ø 239 mm
Thickness (TH) 12 mm	Height (A) 35 mm	Number of holes (C) 4
Brake disc type Solid	Centering (B) 65 mm	Min. thickness 10 mm
Tightening torque 120 Nm		

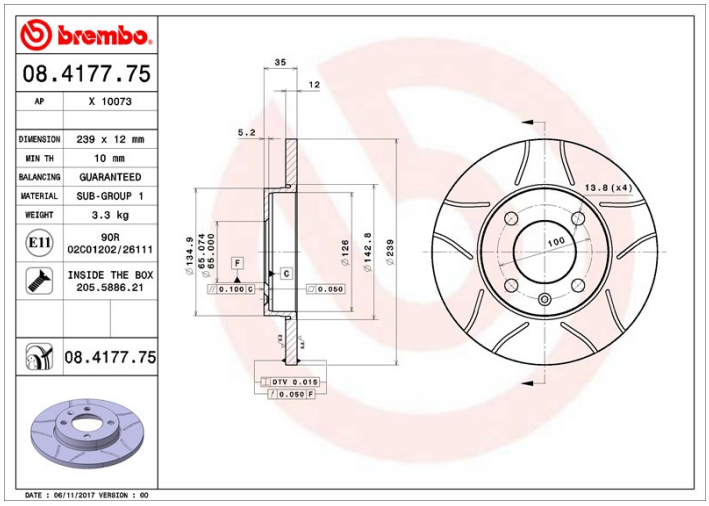

COMPATIBLE VEHICLES

COMPATIBLE OE PART NUMBERS

171615301	AUDI
175615301	AUDI
321615301	AUDI
839615301	AUDI
321615301	SEAT
321615301	VW
839615301	VW
ZBA615301	VW