BRAKE DISC
08.3288.20

The 08.3288.20 brake disc is synonymous with reliability

The Brembo brake disc is fully interchangeable with an Original Equipment brake disc. The control of the entire production cycle allows Brembo to offer brake discs with outstanding performance levels, reliability, durability and comfort in all conditions of use. All Brembo brake discs are accompanied by the ECE-R90 homologation.

- OE-equivalent
- Brembo quality
- ECE-R90 certificate
- Safety
- Fastening screws

Technical specifications

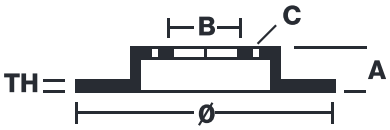

EAN code 8020584328828	Diameter Ø 255 mm	
Thickness (TH) 12,5 mm	Height (A) 75 mm	Number of holes (C) 4
Brake disc type Solid	Centering (B) 63 mm	Min. thickness 11,1 mm
Tightening torque 120 Nm		

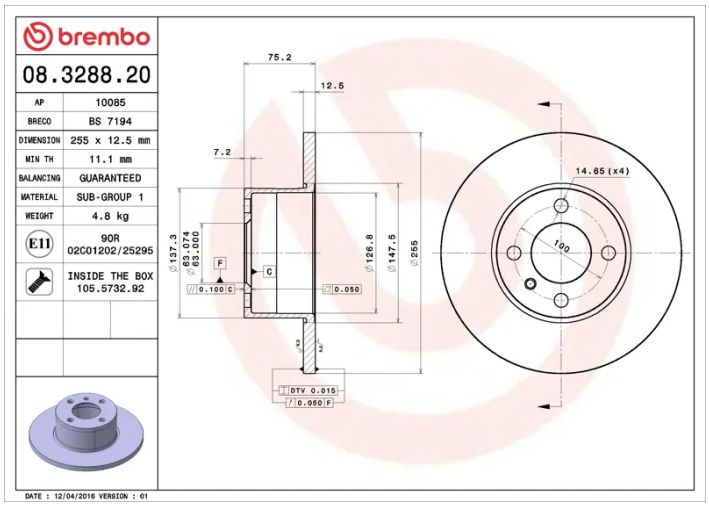

COMPATIBLE VEHICLES

COMPATIBLE OE PART NUMBERS

34111116249	BMW
34111116675	BMW
34111119248	BMW
34111119249	BMW
34111163128	BMW