BRAKE DISC
08.5636.20

The 08.5636.20 brake disc is synonymous with reliability

The Brembo brake disc is fully interchangeable with an Original Equipment brake disc. The control of the entire production cycle allows Brembo to offer brake discs with outstanding performance levels, reliability, durability and comfort in all conditions of use. All Brembo brake discs are accompanied by the ECE-R90 homologation.

- OE-equivalent
- Brembo quality
- ECE-R90 certificate
- Safety
- Fastening screws

Technical specifications

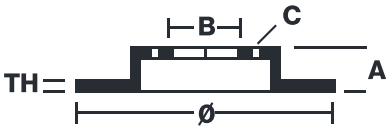

EAN code 8020584563625	Axle Rear	Diameter Ø 251 mm
Thickness (TH) 12 mm	Height (A) 62 mm	Number of holes (C) 4
Brake disc type Solid	Centering (B) 71 mm	Min. thickness 10,8 mm
Tightening torque 90 Nm		

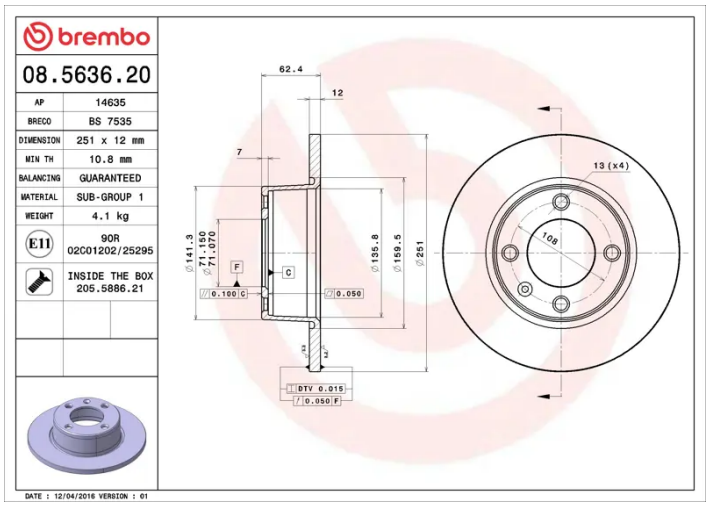

COMPATIBLE VEHICLES

COMPATIBLE OE PART NUMBERS

4246L6	CITROËN