BRAKE DISC MAX
09.6879.76

The 09.6879.76 Max brake disc is synonymous with reliability

The Brembo Max brake disc features grooves on the braking surface. The special shape of the grooves generates greater fading resistance and constant renewal of friction material, quickly restoring optimum braking conditions. The UV paint completes the sporty look.

- Brembo quality
- ECE-R90 certificate
- Performance
- Sports driving
- Sporty look
- Anti-corrosion

Technical specifications

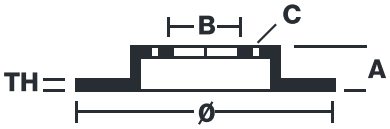

EAN code 8020584013564	Axle Front	Diameter Ø 260 mm
Thickness (TH) 24 mm	Height (A) 53 mm	Number of holes (C) 5
Brake disc type Ventilated	Centering (B) 64 mm	Min. thickness 22,2 mm
Tightening torque 100 Nm		

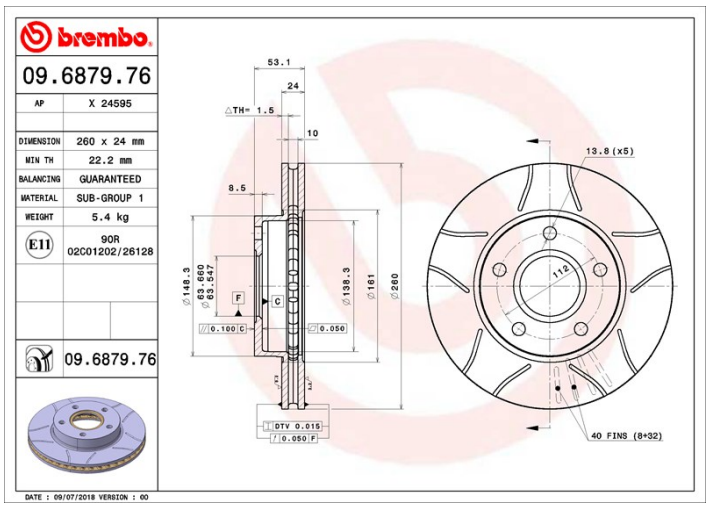

COMPATIBLE VEHICLES

COMPATIBLE OE PART NUMBERS

5022668	FORD
5023441	FORD
5023444	FORD
5027462	FORD
5027463	FORD
6133552	FORD
6168109	FORD
6193694	FORD
6450826	FORD
93GX1125AA	FORD
93GX1125BA	FORD