BRAKE DISC
09.9991.10

The 09.9991.10 brake disc is synonymous with reliability

The Brembo brake disc is fully interchangeable with an Original Equipment brake disc. The control of the entire production cycle allows Brembo to offer brake discs with outstanding performance levels, reliability, durability and comfort in all conditions of use. All Brembo brake discs are accompanied by the ECE-R90 homologation.

- OE-equivalent
- Brembo quality
- ECE-R90 certificate
- Safety

Technical specifications

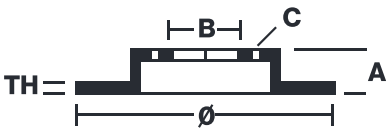

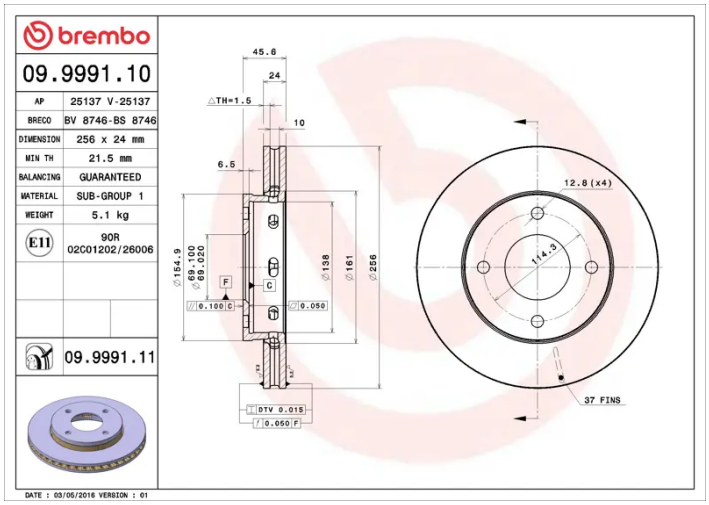

EAN code 8020584999110	Diameter Ø 256 mm	
Thickness (TH) 24 mm	Height (A) 46 mm	Number of holes (C) 4
Brake disc type Ventilated	Centering (B) 69 mm	Min. thickness 21,5 mm
Tightening torque 108 Nm		

COMPATIBLE VEHICLES

COMPATIBLE OE PART NUMBERS

4605A068	MITSUBISHI
4544200001	SMART
A4544200001	SMART