BRAKE DISC PAINTED
09.A302.11

The 09.A302.11 painted brake disc is synonymous with reliability

The Brembo brake disc with special UV paint treatment guarantees superior corrosion resistance for the product, thanks to the protective coating on the outer edges and on the disc hub. The UV paint not only gives the disc a clean, shiny appearance but is also beneficial for the environment as the water-based UV paint treatment does not require the use of chemical solvents and is a low energy consumption process.

- OE-equivalent
- Brembo quality
- ECE-R90 certificate
- Safety
- Anti-corrosion

Technical specifications

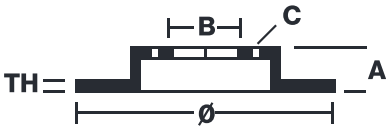

EAN code 8020584037966	Diameter Ø 294 mm	
Thickness (TH) 26 mm	Height (A) 33 mm	Number of holes (C) 6
Brake disc type Ventilated	Centering (B) 88 mm	Min. thickness 24 mm
Tightening torque 110 Nm		

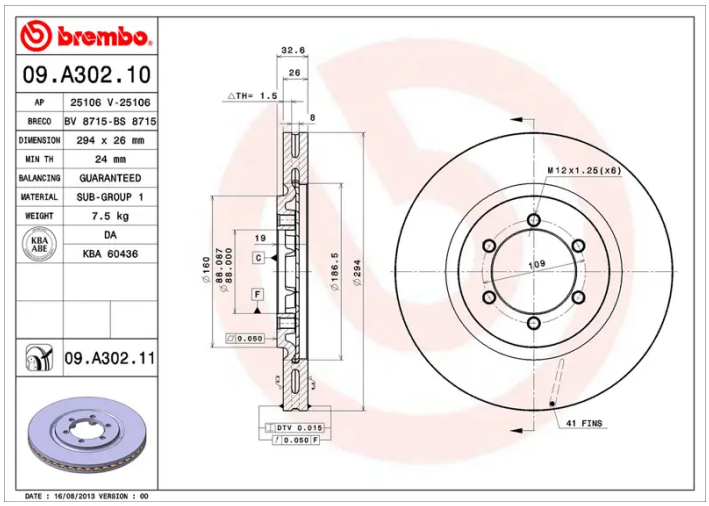

COMPATIBLE VEHICLES

COMPATIBLE OE PART NUMBERS

4144108030	DAEWOO
4144108030	SSANGYONG