BRAKE DISC
09.8555.20

The 09.8555.20 brake disc is synonymous with reliability

The Brembo brake disc is fully interchangeable with an Original Equipment brake disc. The control of the entire production cycle allows Brembo to offer brake discs with outstanding performance levels, reliability, durability and comfort in all conditions of use. All Brembo brake discs are accompanied by the ECE-R90 homologation.

- OE-equivalent
- Brembo quality
- ECE-R90 certificate
- Safety
- High carbon

Technical specifications

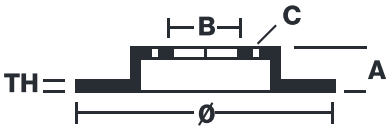

EAN code 8020584855522	Axle Front	Diameter Ø 344 mm
Thickness (TH) 30 mm	Height (A) 76 mm	Number of holes (C) 5
Brake disc type Ventilated	Centering (B) 79 mm	Min. thickness 28,4 mm
Tightening torque 140 Nm		

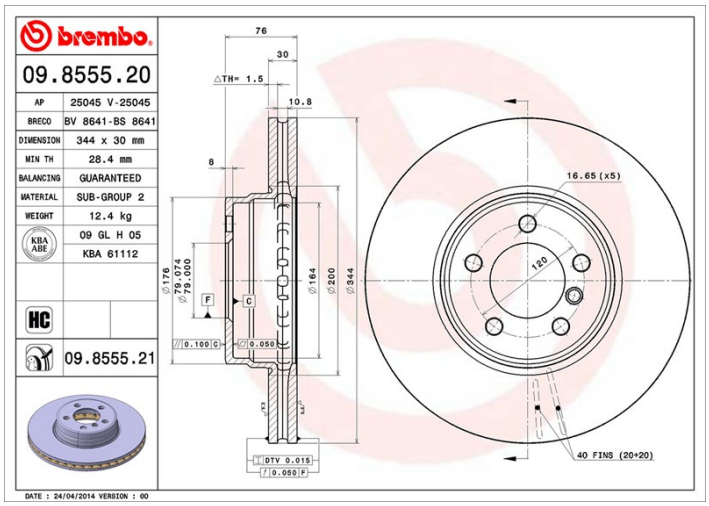

COMPATIBLE VEHICLES

COMPATIBLE OE PART NUMBERS

SDB000200	LAND ROVER
SDB000201	LAND ROVER