BRAKE DISC MAX
09.9468.75

The 09.9468.75 Max brake disc is synonymous with reliability

The Brembo Max brake disc features grooves on the braking surface. The special shape of the grooves generates greater fading resistance and constant renewal of friction material, quickly restoring optimum braking conditions. The UV paint completes the sporty look.

- Brembo quality
- ECE-R90 certificate
- Performance
- Sports driving
- Sporty look
- Anti-corrosion

Technical specifications

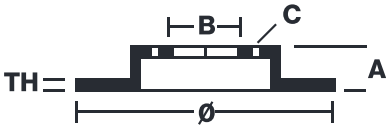

EAN code 8020584037331	Diameter Ø 300 mm	
Thickness (TH) 25 mm	Height (A) 49 mm	Number of holes (C) 5
Brake disc type Ventilated	Centering (B) 64 mm	Min. thickness 23 mm
Tightening torque 100 Nm		

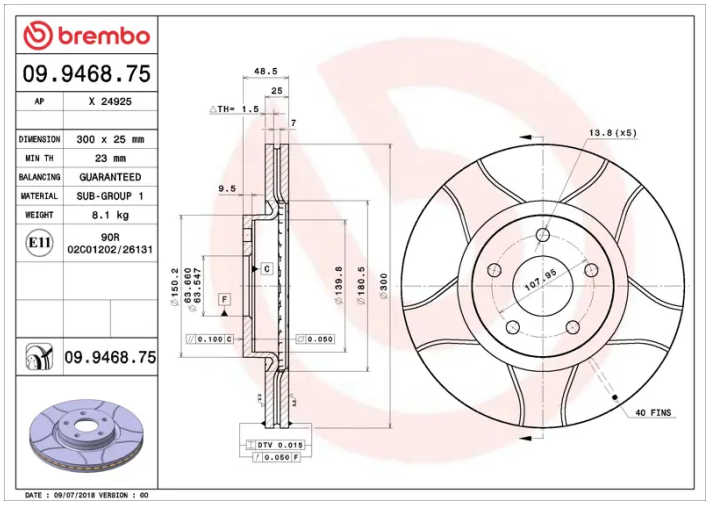

COMPATIBLE VEHICLES

COMPATIBLE OE PART NUMBERS

1223664	FORD
1223666	FORD
1253964	FORD
1253965	FORD
1323560	FORD
1373370	FORD
1469083	FORD
1500152	FORD
1501059	FORD
1520297	FORD
3M512C375B1D	FORD
3M512C375BA	FORD
3M512C375BB	FORD
3M512C375BC	FORD
3M512C375BD	FORD
7M511125BA	FORD
7M511125BB	FORD
DV611125AA	FORD
274510	VOLVO
2745100	VOLVO
312627190	VOLVO
313624120	VOLVO
314718190	VOLVO