BRAKE DISC
09.B451.10

The 09.B451.10 brake disc is synonymous with reliability

The Brembo brake disc is fully interchangeable with an Original Equipment brake disc. The control of the entire production cycle allows Brembo to offer brake discs with outstanding performance levels, reliability, durability and comfort in all conditions of use. All Brembo brake discs are accompanied by the ECE-R90 homologation.

- OE-equivalent
- Brembo quality
- ECE-R90 certificate
- Safety

Technical specifications

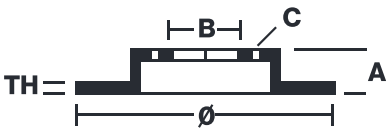

EAN code 8020584021736	Diameter Ø 258 mm	
Thickness (TH) 24 mm	Height (A) 48 mm	Number of holes (C) 4
Brake disc type Ventilated	Centering (B) 57 mm	Min. thickness 22 mm

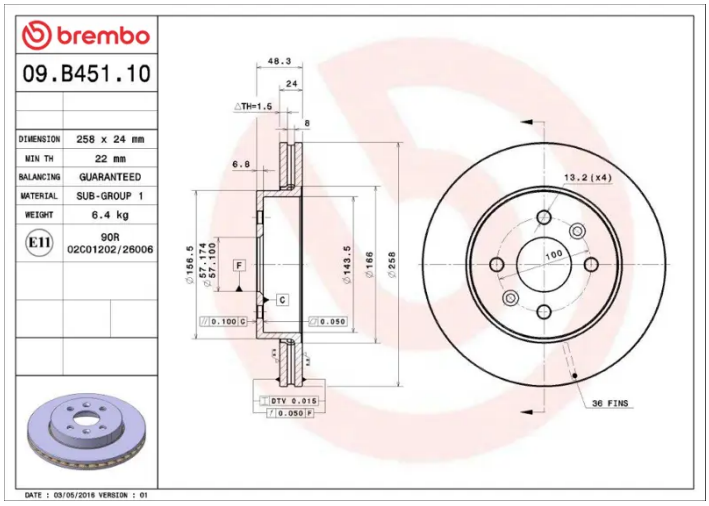

COMPATIBLE VEHICLES

COMPATIBLE OE PART NUMBERS

0K2N133251	KIA
0K2N133251DS	KIA
0K2N233251	KIA
0K52N133251	KIA