# DRUM
# 14.3171.10

## The 14.3171.10 drum is synonymous with reliability

Brembo has developed several design solutions for drum brakes which combine multiple materials to reduce the overall weight. The most popular range of lamellar graphite cast iron drums is supplemented by cast iron drums with a steel sprocket flange and aluminium drums, whereby only the inner part of the drum on which the shoes operate are made of lamellar cast iron, namely the brake band. Additionally drums with built-in bearing kit and hub are added to this range.

- OE-equivalent
- Brembo quality
- Safety
- Durability

## Technical specifications

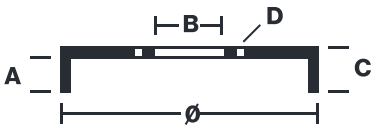


| | | |
|---|---|---|
| EAN code<br>8020584317112 | Axle<br>Rear | Diameter<br>180 mm |
| Width<br>44,5 mm | Height<br>71,5 | Number of holes<br>4 |
| Centering<br>45,2 mm | Max diameter<br>181 mm | |

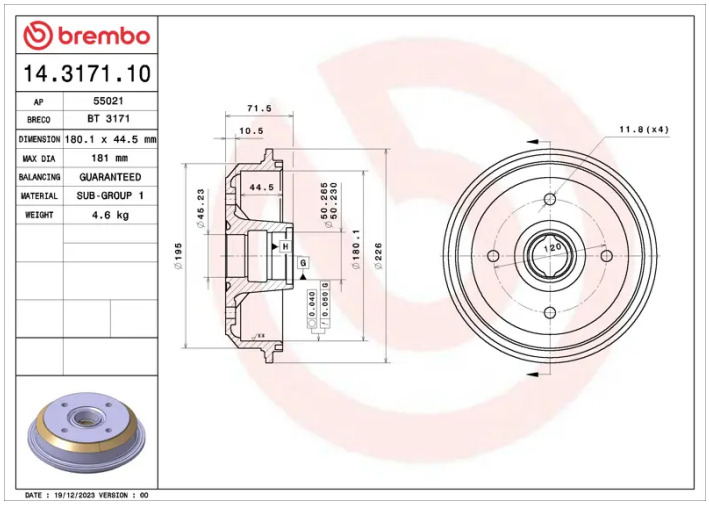


COMPATIBLE VEHICLES

## COMPATIBLE OE PART NUMBERS

| | |
|---|---|
| 42610671000 | HONDA |